New A1 Series

DMS - Diemould

HEATLOCK

Catalogue

The Company

Dear Customer,

The enclosed pages summarise the range of hot runner solutions that are currently available from DMS using Heatlock components.

Although some of the solutions may be familiar to you there are several new developments you may find interesting.

The Heatlock range of nozzles is best known for the unique yellow ceramic insulation ring that offers substantially reduced heat loss, and enhances temperature control.

In 1982 DMS became one of Heatlock's first distributors. Since then the range has been developed considerably due to the exchange of ideas between the two companies leading to many new products. Today DMS is Heatlock's largest stockist.

Heatlock offer ideal solutions for many of todays polymers.

We look forward to speaking with you in the near future in order to find a solution tailored specifically to meet your needs.

Practical Solutions

The example below shows the 8-cavity XX-type manifold in combination with TGCS tunnel gate inserts for gating cover-caps.

- invisible gate mark on the underside of the component
- low hot runner costs
- simple overall system means a stable injection moulding process

Development

Development

Our engineers have many years of experience in specifying hot runner systems. All systems are designed and manufactured in close collaboration with our customers. Your requirements and our know-how lead to solutions focussed on the essentials :

Price and Function

The 8-cavity hot runner system shown on the previous page is a good example of this.

By integration of the hot runner and the tunnel gate inserts, enormous savings in cost were possible. Instead of an expensive and complicated 48-cavity HR system, the task of gating the components was achieved with an 8-cavity hot runner system with 48 tunnel gate inserts.

Tangible advantages in simplicity, quality and costs are the result.

Construction

Using the LKMHeatlock hot runner system is unbelievably simple. All the components are available as 3D-CAD data and can be positioned in the mould construction, including the exposed cut surfaces.

If required, we can also supply complete assemblies for your hot runner system, or send you your CAD data in alternative file formats.

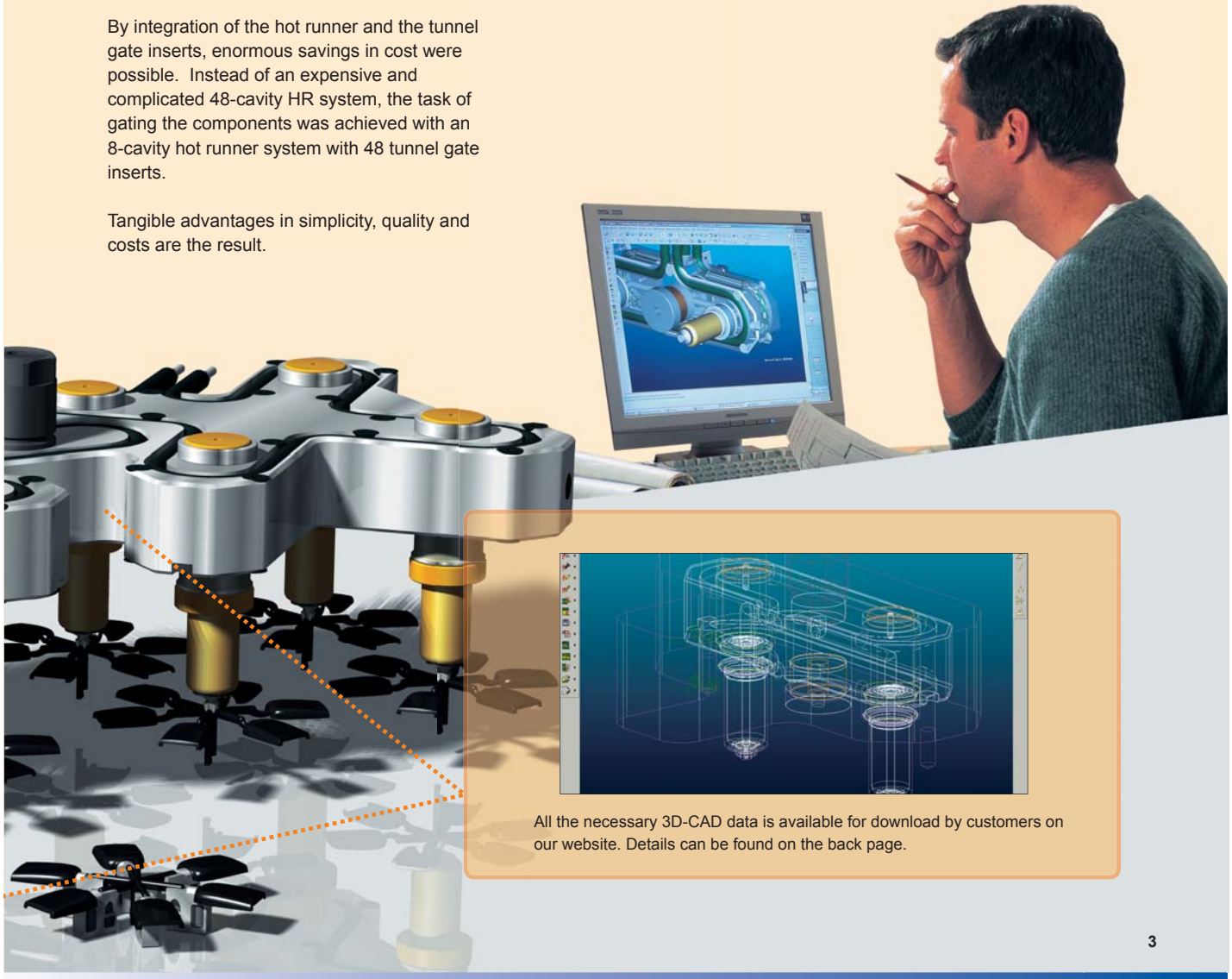

All the necessary 3D-CAD data is available for download by customers on our website. Details can be found on the back page.

Highlights

LKM-Heatlock hot runner systems :

The amalgamation of Heatlock, manufacturers of hot runners since 1982, and LKM, one of the largest producers of standard mould components in the world, created a high performance company operating worldwide - LKMHeatlock.

As part of the LKM group with head offices in Hong Kong and China, LKM-Heatlock has a global network of companies and distributors. Worldwide availability of LKM-Heatlock components is therefore assured at all times.

LKM-Heatlock hot runners are known for their ceramic elements used for thermal insulation of the hot runner system at all contact points.

Ceramic has only 7% of the heat conductivity of steel and is therefore an excellent insulator. Heatlock was the first company in the world to exhibit this technology at Kunststoffmesse K in 1982 in Düsseldorf. Since this technology was launched, thousands of units have been sold and the inexpensive Heatlock systems were established worldwide.

Replaceable heaters

The screw-in heaters can be replaced quickly and easily as required.

Ceramic insulation

Ceramic back supports and centre spacers reduce heat loss.

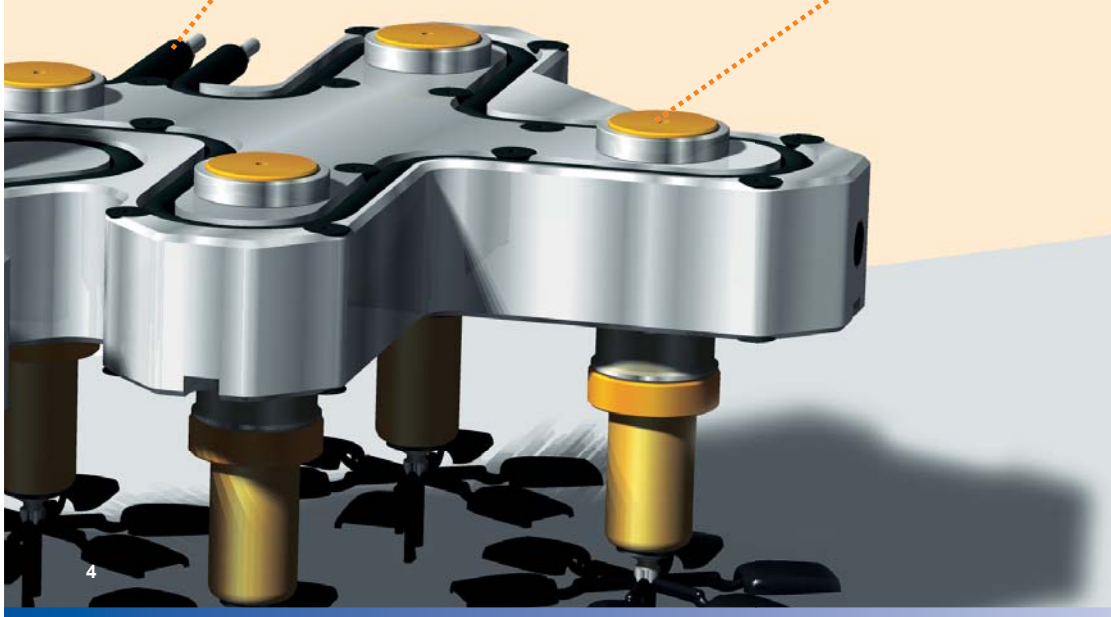

Highlights

Highlights of the LKMHeatlock AI series :

- Very competitively priced hot runner nozzles and systems
- Short delivery times even for customised manifolds and nozzles
- Ceramic insulation for manifolds and nozzles (optional)
- Wide range of standardised nozzles and manifold blocks
- Replaceable nozzle tips
- Easy replacement of heaters and thermocouples
- 3D-CAD data available for all products
- Worldwide service

Optional insulating rings

Use of titanium or ceramic insulating rings is optional

- shortens the heating-up time
- reduces heat loss
- shields the nozzles and manifold block from variations in mould temperature

EN nozzle

The EN nozzle is constructed as a one-piece solid tube which is supplied with machining allowance on its front end. Heaters and thermocouples can be replaced separately.

Replaceable tips

The coated tips of nozzles A1TN and A1TP can easily be replaced as required

TN-Tip

TP-Tip

Samples of single nozzles

Hot Prices !

Here is a quick overview of the various products that are available off the shelf.

The new range has been developed to meet the requirements of todays engineering polymers.

Customised lengths can be supplied on request.

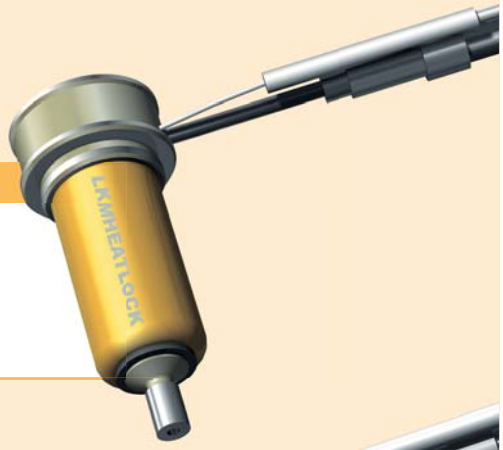

Nozzle A1EN1040, L = 40 mm

EN

- Ideal for gating on to cold runners
- Short installed height
- Supplied with machining allowance
- Suitable for either single or multi cavity applications

Nozzle A1TP1040, L = 40 mm

TP

- Ideal for direct gating with a low gating mark, but higher than with TN nozzles
- Low pressure loss and low shear stress on the melt
- Short installed height
- Suitable for either single or multi cavity applications

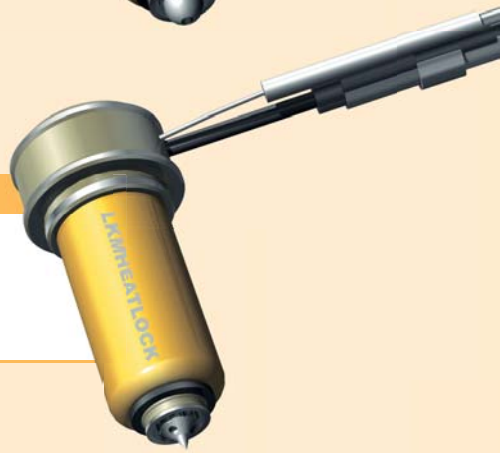

Nozzle A1TN1040, L = 40 mm

TN

- Ideal for gating with a low gating mark
- Short installed height
- Suitable for either single or multi cavity applications

Samples of complete systems

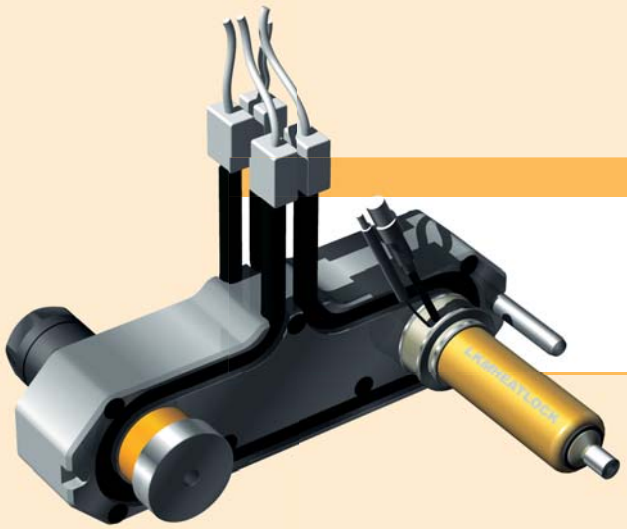

Single Drop Manifold (Dogleg style)

- Centres 120 mm
- Manifold thickness 46 mm
- Channel diameter 8 mm
- Nozzle EN2080
- Feed bush unheated

Customer quote

"LKMHeatlock hot runner systems from DMS-Diemould offer the best price/performance ratio. The quality and service leave nothing to be desired."

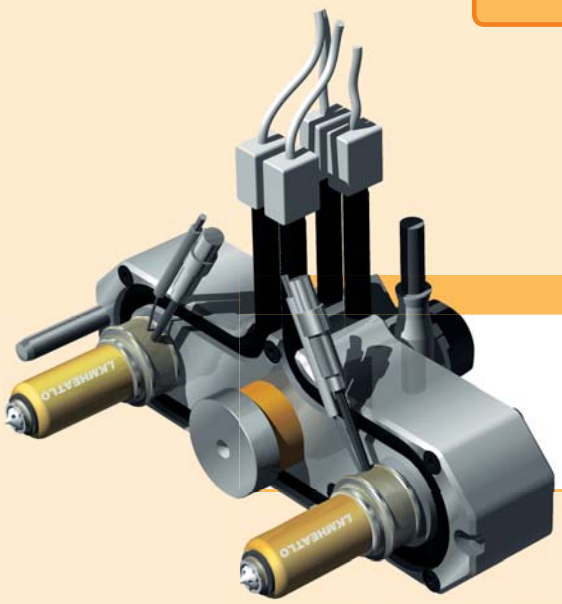

Two Drop Manifold

- Centres 140 mm
- Manifold thickness 36 mm
- Channel diameter 6 mm
- Nozzle TN1060
- Feed bush heated

Overview

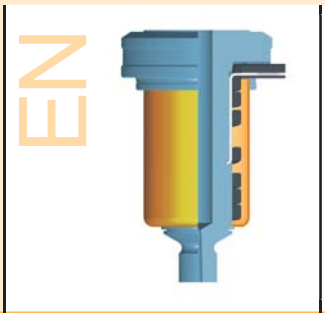

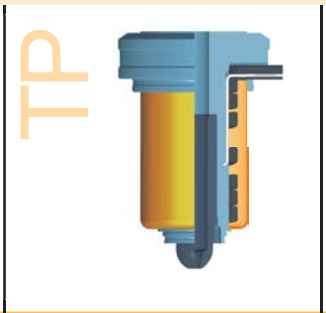

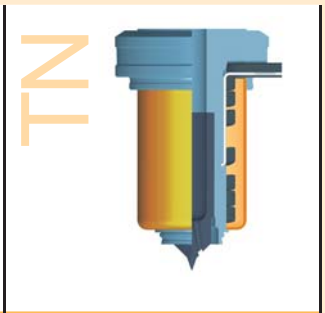

Nozzle Type	EN1	EN2	EN3	EN4	TP1	TP2	TP3	TP4	TN1	TN2	TN3	TN4
Runner Ø in mm	4	6	9	14	4	6	9	14	4	6	9	14
Gate Ød8 in mm	1.5-3	2-4	2-5	3-6	0.6-2	0.8-2.5	1.2-3	1.8-4	0.6-2	0.8-3	1.2-4	1.8-5
Maximum Shot Weight in g												
Low Viscosity	200	500	850	1650	200	500	850	1650	140	330	580	1200
Medium Viscosity	100	270	400	800	100	270	400	800	60	220	340	650
High Viscosity	40	150	280	550	40	150	280	550	20	100	200	400
Suitability and Maximum Shot Weight in g												
ABS (SAN / ASA)	100	270	400	800	100	270	400	800	60	220	340	650
PP	200	500	850	1650	200	500	850	1650	140	330	580	1200
PE	200	500	850	1650	200	500	850	1650	140	330	580	1200
PS	200	500	850	1650	200	500	850	1650	140	330	580	1200
PA6 / PA6.6	100	270	400	800	100	270	400	800	60	220	340	650
PA6 / PA6.6 + GF	40	150	280	550	40	150	280	550	20	100	200	400
PC	40	150	280	550	40	150	280	550	20	100	200	400
PMMA	40	150	280	550	40	150	280	550	20	100	200	400
PC-ABS / PC-PBT	40	150	280	550	40	150	280	550	20	100	200	400
POM	100	270	400	800	100	270	400	800	60	220	340	650
PBT	100	270	400	800	100	270	400	800	60	220	340	650
PET	100	270	400	800	100	270	400	800	60	220	340	650
PPO / PPE	40	150	280	550	40	150	280	550	20	100	200	400
TPE / TPU	100	270	400	800	100	270	400	800	60	220	340	650
PP-EPDM	100	270	400	800	100	270	400	800	60	220	340	650
PES / PEEK	40	150	280	550	40	150	280	550	20	100	200	400
PPS / PEI	40	150	280	550	40	150	280	550	20	100	200	400

Excellent	OK to use.
Mostly suitable	OK to use in most circumstances but check with a DMS engineer before using with unusual applications.
Contact DMS	Always check with a DMS engineer before using.

Note

Because of the wide range of plastics available and the numerous modified types, blends and fillers, closer attention to detail is necessary for many applications. If in doubt, please contact our engineers early in the project to clarify specific requirements.

Viscosity Diagram

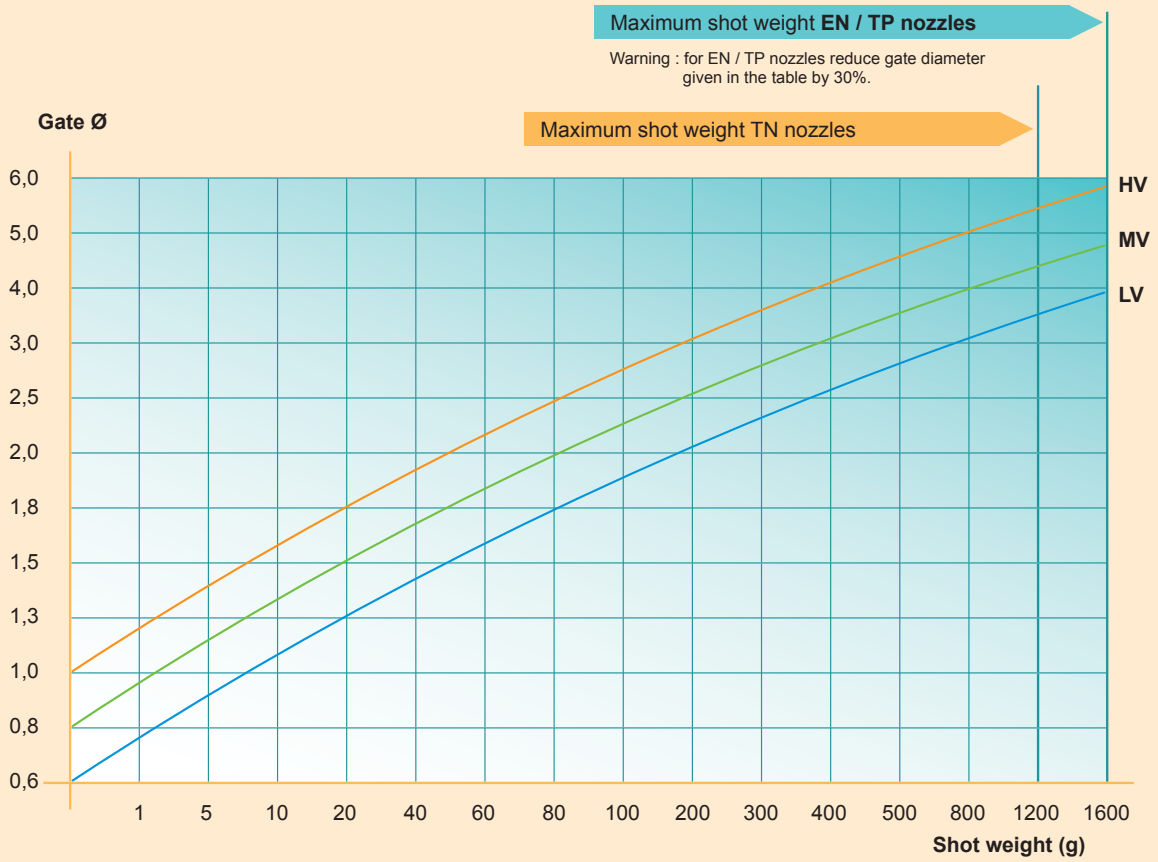

Notes

Warning : If polymers containing filler (glass fibres, carbon fibres etc.) are used, increase the gate diameters suggested by the table by 30%.

For all applications :

The recommended shot weights and gate diameters are for guideline purposes only.

The issues below influence the gate size and must always be taken in to account before agreeing on a firm specification.

- Geometry of the component (flow path / wall thickness ratio, ribs, openings etc.)
- Mould design (cooling, flow paths etc.)
- Type of polymer (modifications, blends, viscosity etc.)
- Fillers (glass fibres, beads etc.)

If necessary, please ask a DMS engineer for advice at the start of the project.

Contents

EN - Nozzles Pages 11-14

TP - Nozzles Pages 15-18

TN - Nozzles Pages 19-22

Band Heaters Pages 23-24

Manifolds Pages 25-29

Accesories Pages 30-31

Hot Halves / Custom Manifolds Pages 32-35

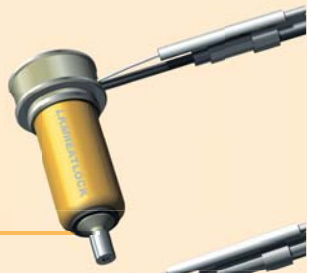

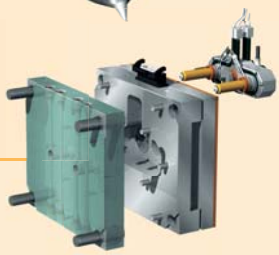

EN Description

Series A1

EN Nozzle

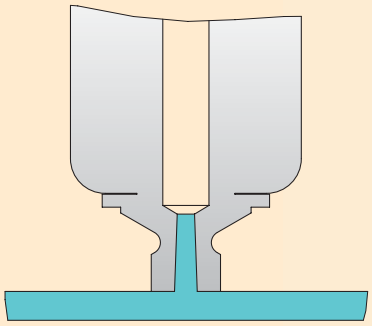

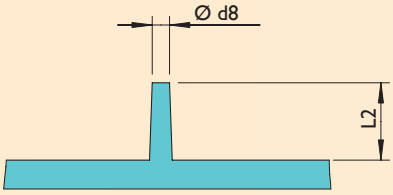

- open nozzle means minimal shear stress on the melt
- used mainly for gating on to cold runner systems
- heater and thermocouple can be replaced separately
- use of titanium or ceramic insulating rings optional
- one version suits both single and multi cavity applications

Nozzle Type	EN1	EN2	EN3	EN4
Length Range	40 - 120	40 - 160	60 - 180	80 - 200
Feed Channel Ø	4	6	9	14
Gate Ød8	1.5 - 3	2 - 4	2 - 5	3 - 6
Sprue Length L2	6.7	8	9	9

Maximum Shot Weight in g				
Low Viscosity	150	250	850	1650
Medium Viscosity	80	130	400	800
High Viscosity	30	60	200	400

EN Installation Instructions

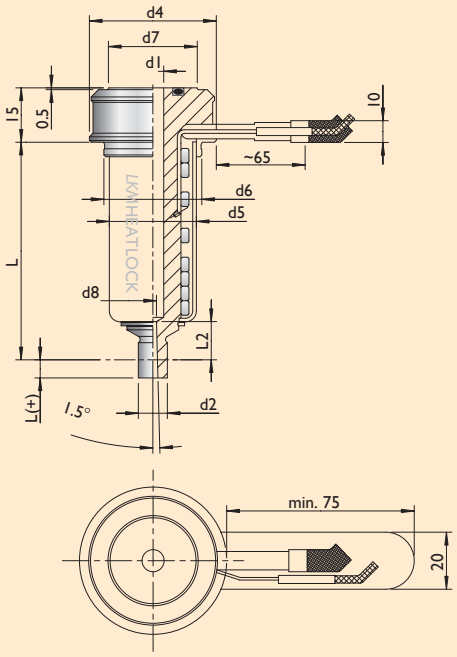

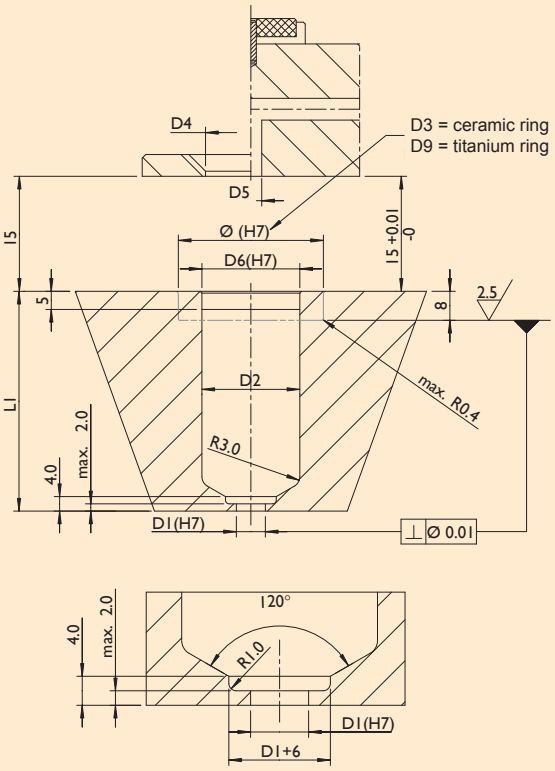

Warning :

- The length of the contact surface must not exceed 2mm.
- The gate diameter and taper angle may be increased to suit the application.

Gating on to cold runners :

Do not shut nozzle out on MH of tool.
1mm minimum disc is recommended.
Maximum contact of 2mm is required.

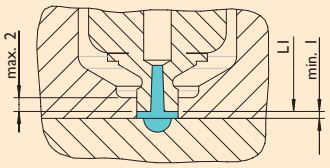

Gating on to contoured surfaces :

Do not reduce nozzle length below L1.
Maximum contact of 2mm is required.

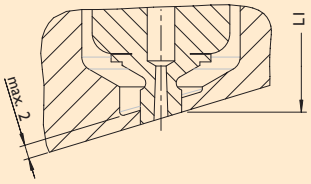

Optional Products (please order separately if required)

Insulating rings are recommended, depending on the installation, cooling circuit and type of polymer.

The processing temperature of the polymer should be taken in to account when choosing a suitable ring.

* Identified in the UL Yellow Book (Underwriters Laboratories, USA) with the RTI values above 1,300ºC for continuous exposure at high temperature.

Titanium - Ring

Engineering polymers (260°C to 280°C)
ABS, PA, SAN, POM, PBT etc.

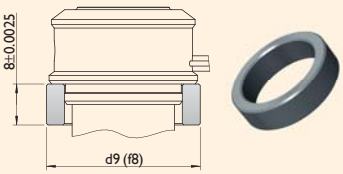

Ceramic - Ring

High performance polymers *(T > 280°C)
PC, PA+GF, PA6, PA66, PEI, PEEK, PPS, PES

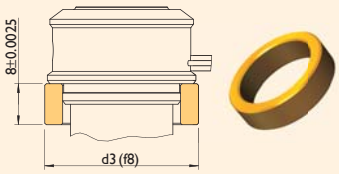

EN Installation Instructions

A1EN1 040 ← Order Example

Nozzle Dimensions													Fitting Dimensions								Options		
A1 EN	Length	Length (including expansion at 200°C)	Machining Allowance	Feed Channel Ø		Ceramic Ring Ø (optional)	Head Ø				Gate Ø	Titanium Ring Ø (optional)									O - Ring	Ceramic Ring	Titanium Ring
Code	L	L1	L(+)	d1	d2	d3	d4	d5	d6	d7	d8	d9	L2	D1	D2	D3	D4	D5	D6	D9			
A1EN1040	40	40.08	5	4	6	30	29	20	23	18	1.5	30	6.7	6	23	30	21	6	23	30	ORING00608	KEM03002308	TIM03002308
A1EN1050	50	50.1																					
A1EN1060	60	60.11																					
A1EN1080	80	80.15																					
A1EN1100	100	100.19																					
A1EN1120	120	120.23																					
A1EN2040	40	40.08	5	6	8	40	35	24	27	24.5	2	36	8	8	27	40	28	6	27	36	ORING00620	KEM04002708	TIM03602708
A1EN2060	60	60.11																					
A1EN2080	80	80.15																					
A1EN2100	100	100.19																					
A1EN2120	120	120.23																					
A1EN2140	140	140.27																					
A1EN2160	160	160.3																					
A1EN3060	60	60.11	10	9	12	60	48	34	39	32	2	50	9	12	39	60	42	9	39	50	ORING00630	KEM06003908	TIM05003908
A1EN3080	80	80.15																					
A1EN3100	100	100.19																					
A1EN3120	120	120.23																					
A1EN3140	140	140.27																					
A1EN3160	160	160.3																					
A1EN3180	180	180.34																					
A1EN4080	80	80.15	20	14	16	56	52	38	44	34.5	3	56	9	16	44	56	46	14	44	54	ORING00640	KEM05604408	TIM05404408
A1EN4100	100	100.19																					
A1EN4120	120	120.23																					
A1EN4140	140	140.27																					
A1EN4160	160	160.3																					
A1EN4180	180	180.34																					
A1EN4200	200	200.38																					

Single Nozzle Instructions

The single nozzle can be either clamped with the location ring or have a 0.5mm air gap. Please note maximum permitted contact area if clamping is used.

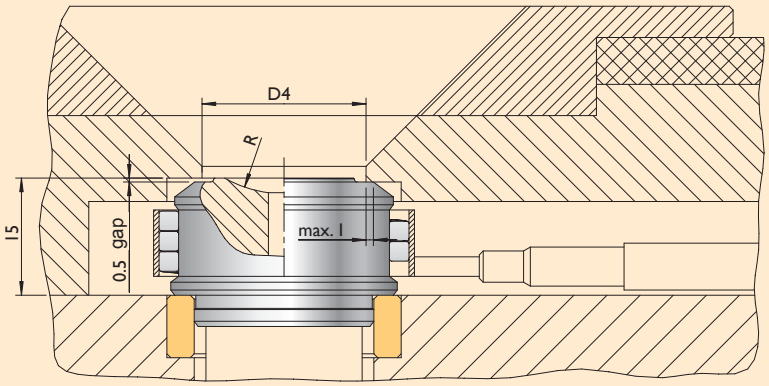

- An additional head heater is recommended for all polymers except PP, PE and PS.
- **Warning :** Connect the head heater to a separate circuit, do not run in parallel with the nozzle heater.
- Maximum contact 1mm between the nozzle and location ring.

! For information on the use of **nozzle band heaters**, see **page 23**.

EN Spares List

Nozzle Code	Nozzle Body	Heater	Thermo-couple	Reflector	O - Ring	Ceramic Ring	Titanium Ring
A1EN1							
	A1EN104006	CS14120330200	TC00140195	RFT120120-040	ORING00608	KEM03002308	TIM03002308
	A1EN105006	CS14120430200	TC00140195	RFT120120-050	ORING00608	KEM03002308	TIM03002308
	A1EN106006	CS14120530225	TC00140200	RFT120120-060	ORING00608	KEM03002308	TIM03002308
	A1EN108006	CS14120730250	TC00140210	RFT120120-080	ORING00608	KEM03002308	TIM03002308
	A1EN110006	CS14120930350	TC00140210	RFT120120-100	ORING00608	KEM03002308	TIM03002308
	A1EN112006	CS14121130350	TC00140220	RFT120120-120	ORING00608	KEM03002308	TIM03002308
A1EN2							
	A1EN204008	CS14150310260	TC00140195	RFT224200-040	ORING00620	KEM04002708	TIM03602708
	A1EN206008	CS14150510300	TC00140200	RFT224200-060	ORING00620	KEM04002708	TIM03602708
	A1EN208008	CS14150710350	TC00140210	RFT224200-080	ORING00620	KEM04002708	TIM03602708
	A1EN210008	CS14150910450	TC00140210	RFT224200-100	ORING00620	KEM04002708	TIM03602708
	A1EN212008	CS14151110450	TC00140220	RFT224200-120	ORING00620	KEM04002708	TIM03602708
	A1EN214008	CS14151310500	TC00140220	RFT224200-140	ORING00620	KEM04002708	TIM03602708
	A1EN216008	CS14151510550	TC00140230	RFT224200-160	ORING00620	KEM04002708	TIM03602708
A1EN3							
	A1EN306012	CS14210490400	TC00140200	RFT334200-060	ORING00630	KEM06003908	TIM05003908
	A1EN308012	CS14210690450	TC00140210	RFT334200-080	ORING00630	KEM06003908	TIM05003908
	A1EN310012	CS14210890500	TC00140210	RFT334200-100	ORING00630	KEM06003908	TIM05003908
	A1EN312012	CS14211090600	TC00140220	RFT334200-120	ORING00630	KEM06003908	TIM05003908
	A1EN314012	CS14211290650	TC00140220	RFT334200-140	ORING00630	KEM06003908	TIM05003908
	A1EN316012	CS14211490700	TC00140220	RFT334200-160	ORING00630	KEM06003908	TIM05003908
	A1EN318012	CS14211690750	TC00140230	RFT334200-180	ORING00630	KEM06003908	TIM05003908
A1EN4							
	A1EN408016	CS01280680600	TC00140210	RFT438200-080	ORING00640	KEM05604408	TIM05404408
	A1EN410016	CS01280880700	TC00140210	RFT438200-100	ORING00640	KEM05604408	TIM05404408
	A1EN412016	CS01281080750	TC00140220	RFT438200-120	ORING00640	KEM05604408	TIM05404408
	A1EN414016	CS01281280800	TC00140220	RFT438200-140	ORING00640	KEM05604408	TIM05404408
	A1EN416016	CS01281480850	TC00140230	RFT438200-160	ORING00640	KEM05604408	TIM05404408
	A1EN418016	CS01281680900	TC00140230	RFT438200-180	ORING00640	KEM05604408	TIM05404408
	A1EN420016	CS01281880950	TC00140250	RFT438200-200	ORING00640	KEM05604408	TIM05404408

Nozzle connections :
- 230 Volt
- Thermocouple Type J

Heater	White (2x)	Load
	Yellow / Green	Earth
Thermocouple	Black	Positive [+]
	White	Negative [-]

TP Description

Series A1

TP Nozzle

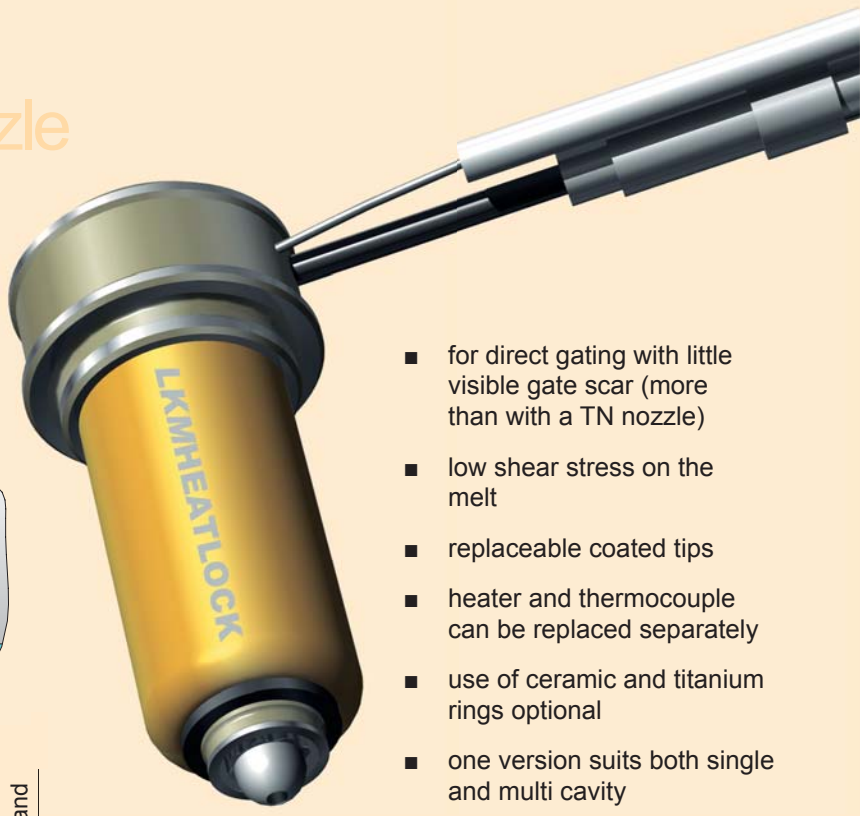

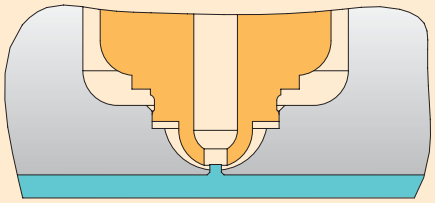

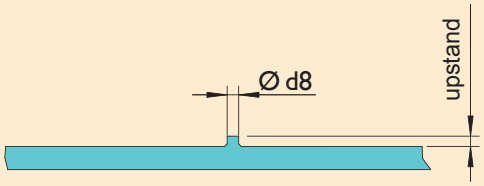

- for direct gating with little visible gate scar (more than with a TN nozzle)
- low shear stress on the melt
- replaceable coated tips
- heater and thermocouple can be replaced separately
- use of ceramic and titanium rings optional
- one version suits both single and multi cavity

Nozzle Type	TP1	TP2	TP3	TP4
Length Range	40 - 120	40 - 160	60 - 180	80 - 200
Feed Channel Ø	4	6	9	14
Gate Ød8	0.6 - 2	0.8 - 3	1.2 - 4	1.8 - 5
Minimum upstand (approx)	1 - 2	1 - 3	1.5 - 4	2 - 5

Maximum Shot Weight in g				
Low Viscosity	150	250	850	1650
Medium Viscosity	80	130	400	800
High Viscosity	30	60	200	400

TP Installation Instructions

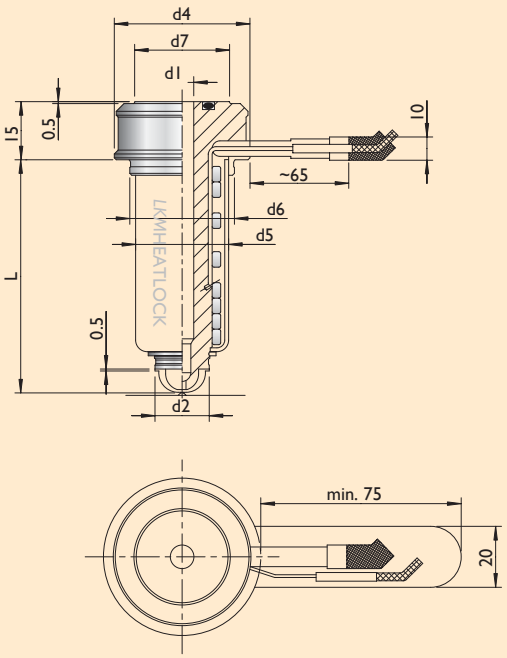

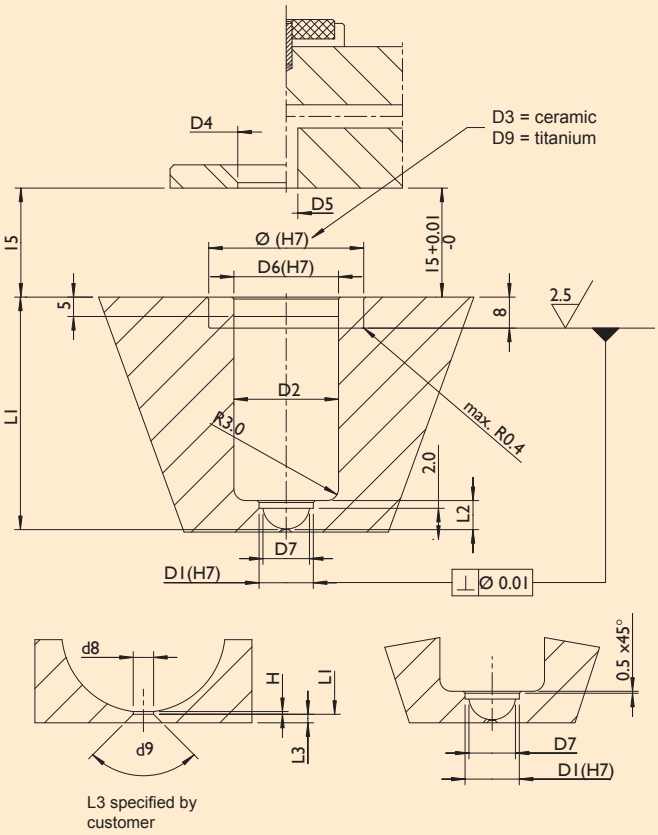

L3 specified by customer

Optional Products (please order separately if required)

Insulating rings are recommended, depending on the installation, cooling circuit and type of polymer.

The processing temperature of the polymer should be taken in to account when choosing a suitable ring.

* Identified in the UL Yellow Book (Underwriters Laboratories, USA) with the RTI values above 1,300ºC for continuous exposure at high temperature.

Titanium - Ring

Engineering polymers (260ºC to 280°C)
ABS, PA, SAN, POM, PBT etc.

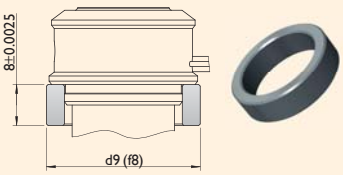

Ceramic - Ring

High performance polymers *(T > 280°C)
PC, PA+GF, PA6, PA66, PEI, PEEK, PPS, PES

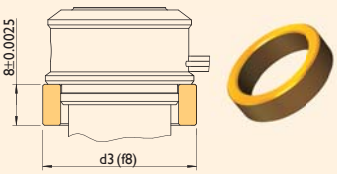

TP - Tip

Installation instructions :
Install the tip using the optional installation tool, heat the nozzle to 200ºC and apply the correct torque.

Nozzle Type	Torque [Nm]	Installation Tool Order Code
TP1 / TN1	15	A11FXTN0907
TP2 / TN2	20	A12FXTN1210
TP3 / TN3	20	A13FXTN1513
TP4 / TN4	25	A14FXTN2220

TP Installation Instructions

A1TP1 - 040 ← Order Example

Nozzle Dimensions											Fitting Dimensions											Options		
A1 TP	Length	Length including expansion at 200°C	Feed channel Ø		Ceramic ring (optional)	Head Ø				Titanium ring Ø (optional)	Gate Ø											O - Ring	Ceramic Ring	Titanium Ring
Typ	L	L1	d1	d2	d3	d4	d5	d6	d7	d9	d8	H	L2	D1	D2	D3	D4	D5	D6	D7	D9			
A1TP1040	40	40.11	4	11	30	29	20	23	18	30	≥ 0,6	0,2	6	11	23	30	21	6	23	9	30	ORING00608	KEM03002308	TIM03002308
A1TP1050	50	50.13																						
A1TP1060	60	60.15																						
A1TP1080	80	80.19																						
A1TP1100	100	100.23																						
A1TP1120	120	120.26																						
A1TP2040	40	40.08	6	14	40	35	24	27	24.5	36	≥ 0,8	0,2	7,5	14	27	40	28	6	27	12	36	ORING00620	KEM06003908	TIM05003908
A1TP2060	60	60.16																						
A1TP2080	80	80.20																						
A1TP2100	100	100.24																						
A1TP2120	120	120.28																						
A1TP2140	140	140.31																						
A1TP2160	160	160.35																						
A1TP3060	60	60.17	9	19	60	48	34	39	32	50	≥ 1,2	0,3	9,5	19	39	60	42	9	39	16,5	50	ORING00630	KEM06003908	TIM05003908
A1TP3080	80	80.21																						
A1TP3100	100	100.25																						
A1TP3120	120	120.29																						
A1TP3140	140	140.32																						
A1TP3160	160	160.36																						
A1TP3180	180	180.40																						
A1TP4080	80	80.21	14	25	56	52	38	44	34.5	56	≥ 1,8	0,4	10,5	25	44	56	46	14	44	22,5	56	ORING00640	KEM05604408	TIM05404408
A1TP4100	100	100.25																						
A1TP4120	120	120.29																						
A1TP4140	140	140.33																						
A1TP4160	160	160.37																						
A1TP4180	180	180.40																						
A1TP4200	200	200.44																						

Single Nozzle Instructions

The single nozzle can be either clamped with the location ring or have a 0.5mm air gap. Please note the maximum permitted contact area if clamping is used.

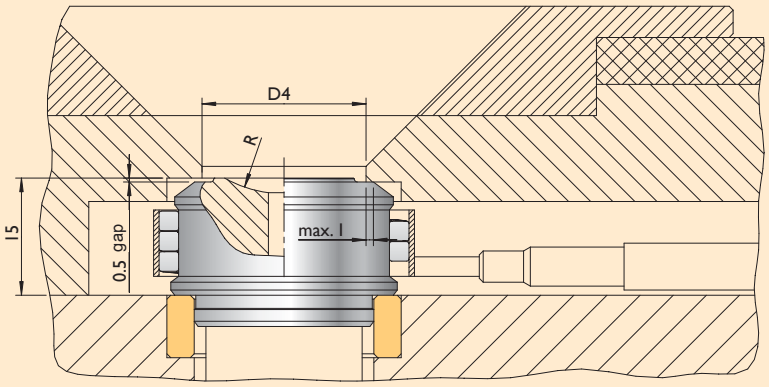

- An additional head heater is recommended for all polymers except PP, PE and PS.
- **Warning :** Connect the head heater to a separate circuit, do not run in parallel with the nozzle heater.
- Maximum contact between the nozzle and location ring.

! For information on the use of **nozzle band heaters**, see **page 23**.

TP Spares List

Nozzle Type	Nozzle Body	Tip	Heater	Thermo-couple	Reflector	O - Ring	Ceramic Ring	Titanium Ring
A1TP1								
	A1BD104011	A1TP129151	CS14120330200	TC00140195	RFT120120-040	ORING00608	KEM03002308	TIM03002308
	A1BD105011	A1TP129151	CS14120430200	TC00140200	RFT120120-050	ORING00608	KEM03002308	TIM03002308
	A1BD106011	A1TP129151	CS14120530225	TC00140210	RFT120120-060	ORING00608	KEM03002308	TIM03002308
	A1BD108011	A1TP129151	CS14120730250	TC00140220	RFT120120-080	ORING00608	KEM03002308	TIM03002308
	A1BD110011	A1TP129151	CS14120930350	TC00140220	RFT120120-100	ORING00608	KEM03002308	TIM03002308
	A1BD112011	A1TP129151	CS14121130350	TC00140250	RFT120120-120	ORING00608	KEM03002308	TIM03002308
A1TP2								
	A1BD204014	A1TP239201	CS14150310260	TC00140195	RFT224200-040	ORING00620	KEM04002708	TIM05003908
	A1BD206014	A1TP239201	CS14150510300	TC00140200	RFT224200-060	ORING00620	KEM04002708	TIM05003908
	A1BD208014	A1TP239201	CS14150710350	TC00140210	RFT224200-080	ORING00620	KEM04002708	TIM05003908
	A1BD210014	A1TP239201	CS14150910450	TC00140220	RFT224200-100	ORING00620	KEM04002708	TIM05003908
	A1BD212014	A1TP239201	CS14151110450	TC00140230	RFT224200-120	ORING00620	KEM04002708	TIM05003908
	A1BD214014	A1TP239201	CS14151310500	TC00140250	RFT224200-140	ORING00620	KEM04002708	TIM05003908
	A1BD216014	A1TP239201	CS14151510550	TC00140250	RFT224200-160	ORING00620	KEM04002708	TIM05003908
A1TP3								
	A1BD306019	A1TP347251	CS14210490400	TC00140200	RFT334200-060	ORING00630	KEM06003908	TIM05003908
	A1BD308019	A1TP347251	CS14210690450	TC00140210	RFT334200-080	ORING00630	KEM06003908	TIM05003908
	A1BD310019	A1TP347251	CS14210890500	TC00140220	RFT334200-100	ORING00630	KEM06003908	TIM05003908
	A1BD312019	A1TP347251	CS14211090600	TC00140230	RFT334200-120	ORING00630	KEM06003908	TIM05003908
	A1BD314019	A1TP347251	CS14211290650	TC00140250	RFT334200-140	ORING00630	KEM06003908	TIM05003908
	A1BD316019	A1TP347251	CS14211490700	TC00140250	RFT334200-160	ORING00630	KEM06003908	TIM05003908
	A1BD318019	A1TP347251	CS14211690750	TC00140270	RFT334200-180	ORING00630	KEM06003908	TIM05003908
A1TP4								
	A1BD408025	A1TP449301	CS01280680600	TC00140210	RFT438200-080	ORING00640	KEM05604408	TIM05404408
	A1BD410025	A1TP449301	CS01280880700	TC00140220	RFT438200-100	ORING00640	KEM05604408	TIM05404408
	A1BD412025	A1TP449301	CS01281080750	TC00140230	RFT438200-120	ORING00640	KEM05604408	TIM05404408
	A1BD414025	A1TP449301	CS01281280800	TC00140250	RFT438200-140	ORING00640	KEM05604408	TIM05404408
	A1BD416025	A1TP449301	CS01281480850	TC00140250	RFT438200-160	ORING00640	KEM05604408	TIM05404408
	A1BD418025	A1TP449301	CS01281680900	TC00140270	RFT438200-180	ORING00640	KEM05604408	TIM05404408
	A1BD420025	A1TP449301	CS01281880950	TC00140270	RFT438200-200	ORING00640	KEM05604408	TIM05404408

Nozzle connection:
- 230 Volt
- Thermocouple Typ J

Heater	White (2x)	Load
	Yellow / Green	Earth
Thermocouple	Black	Positive [+]
	White	Negative [-]

TN Description

Series A1

TN

Nozzle

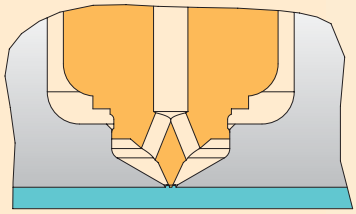

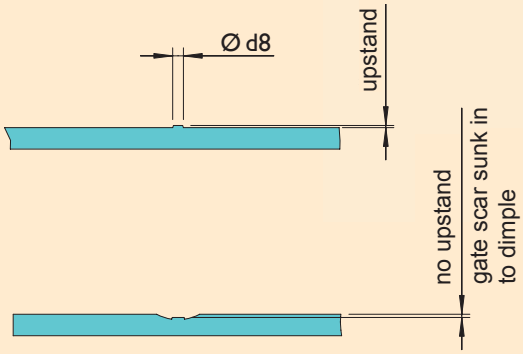

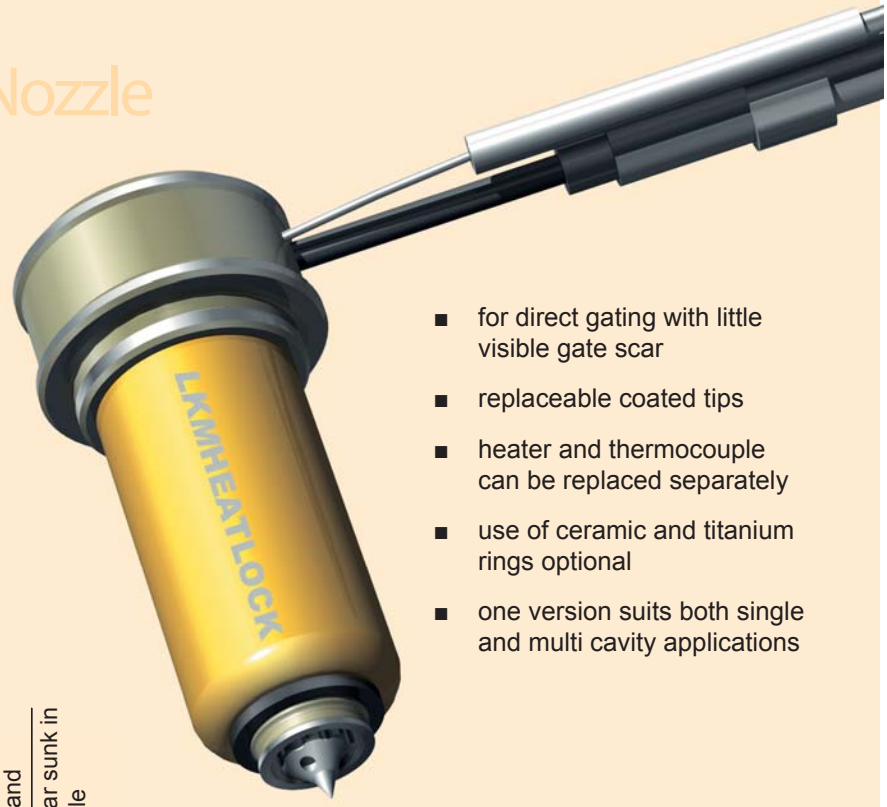

- for direct gating with little visible gate scar
- replaceable coated tips
- heater and thermocouple can be replaced separately
- use of ceramic and titanium rings optional
- one version suits both single and multi cavity applications

Nozzle Type	TN1	TN2	TN3	TN4
Length Range	40 - 120	40 - 160	60 - 180	80 - 200
Feed Channel Ø	4	6	9	14
Gate Ød8	0.6 - 2	0.8 - 3	1.2 - 4	1.8 - 5
upstand (approx)	0.2 - 0.5	0.2 - 1	0.3 - 1	0.4 - 1.5

Maximum Shot Weight in g				
Low Viscosity	100	150	580	1200
Medium Viscosity	40	60	340	650
High Viscosity	15	35	200	400

TN Installation Instructions

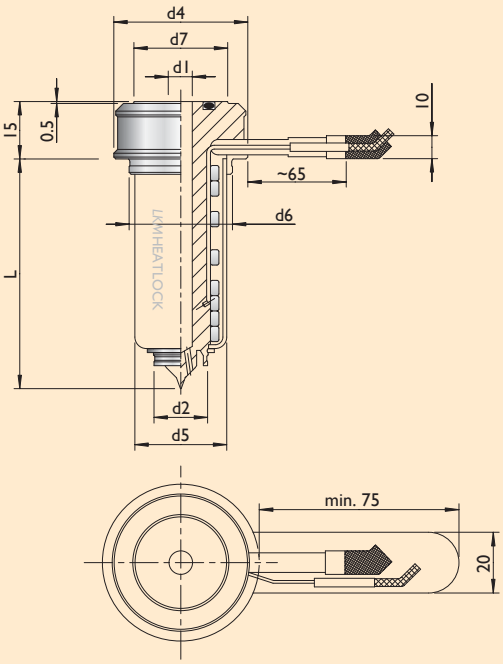

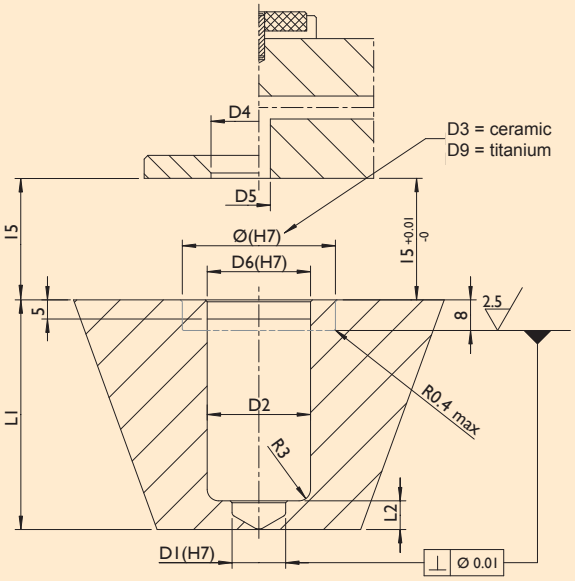

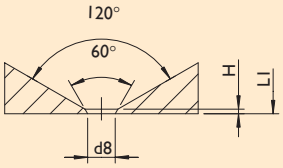

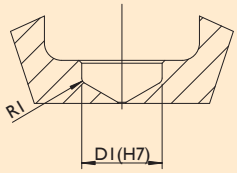

Optional Products (please order separately if required)

Insulating rings are recommended, depending on the installation, cooling circuit and type of polymer.

The processing temperature of the polymer should be taken in to account when choosing a suitable ring.

* Identified in the UL Yellow Book (Underwriters Laboratories, USA) with the RTI values above 1,300ºC for continuous exposure at high temperature.

Titanium - Ring

Engineering polymers (260ºC to 280°C)
ABS, PA, SAN, POM, PBT etc.

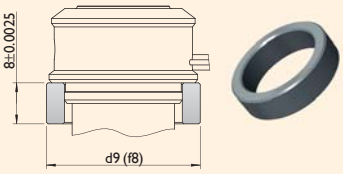

Ceramic - Ring

High performance polymers *(T > 280°C)
PC, PA+GF, PA6, PA66, PEI, PEEK, PPS, PES

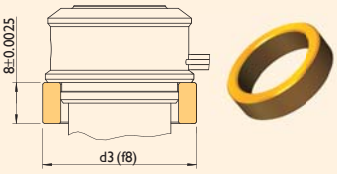

TN - Tip

Installation instructions :
Install the tip using the optional installation tool, heat the nozzle to 200ºC and apply the correct torque.

Nozzle Type	Torque [Nm]	Installation Tool Order Code
TP1 / TN1	15	A11FXTN0907
TP2 / TN2	20	A12FXTN1210
TP3 / TN3	20	A13FXTN1513
TP4 / TN4	25	A14FXTN2220

TN Installation Instructions

A1TN1 - 040 ← Order Example

Nozzle Dimensions											Fitting Dimensions										Options		
A1 TN	Length	Length including expansion at 200°C	Feed channel Ø		Ceramic Ø (optional)	Head Ø				Titanium ring Ø (optional)	Gate Ø										O - Ring	Ceramic Ring	Titanium Ring
Typ	L	L1	d1	d2	d3	d4	d5	d6	d7	d9	d8	H	L2	D1	D2	D3	D4	D5	D6	D9			
A1TN1040	40	40.11	4	11	30	29	20	23	18	30	≥ 0,6	0,2	6	11	23	30	21	6	23	30	ORING00608	KEM03002308	TIM03002308
A1TN1050	50	50.13																					
A1TN1060	60	60.15																					
A1TN1080	80	80.19																					
A1TN1100	100	100.23																					
A1TN1120	120	120.26																					
A1TN2040	40	40.08	6	14	40	35	24	27	24.5	36	≥ 0,8	0,2	7,5	14	27	40	28	6	27	36	ORING00620	KEM04002708	TIM03602708
A1TN2060	60	60.16																					
A1TN2080	80	80.20																					
A1TN2100	100	100.24																					
A1TN2120	120	120.28																					
A1TN2140	140	140.31																					
A1TN2160	160	160.35																					
A1TN3060	60	60.17	9	19	60	48	34	39	32	50	≥ 1,2	0,3	9,5	19	39	60	42	9	39	50	ORING00630	KEM06003908	TIM05003908
A1TN3080	80	80.21																					
A1TN3100	100	100.25																					
A1TN3120	120	120.29																					
A1TN3140	140	140.32																					
A1TN3160	160	160.36																					
A1TN3180	180	180.40																					
A1TN4080	80	80.21	14	25	56	52	38	44	34.5	56	≥ 1,8	0,4	11	25	44	56	46	14	44	56	ORING00640	KEM05604408	TIM05404408
A1TN4100	100	100.25																					
A1TN4120	120	120.29																					
A1TN4140	140	140.33																					
A1TN4160	160	160.37																					
A1TN4180	180	180.40																					
A1TN4200	200	200.44																					

Single Nozzle Instructions

The single nozzle can be either clamped with the location ring or have a 0.5mm air gap. Please note the minimum permitted contact area if clamping is used.

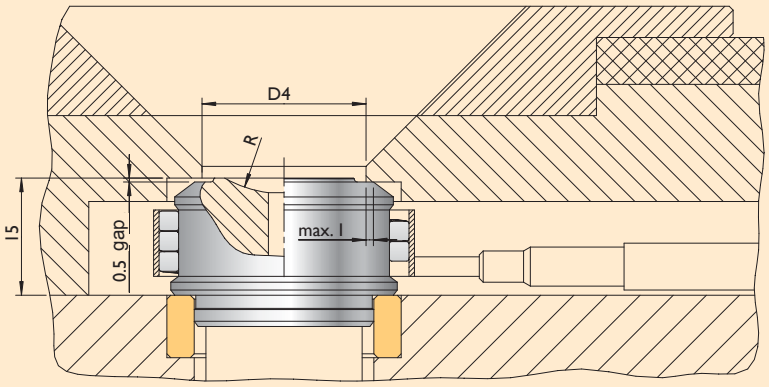

- An additional head heater is recommended for all polymers except PP, PE and PS.
- **Warning :** Connect the head heater to a separate circuit, do not run in parallel with the nozzle heater.
- Maximum contact 1mm between the nozzle and location ring.

! For information on the use of the **nozzle band heaters**, see **page 23**.

TN Spares List

Nozzle Type	Nozzle Body	Tip	Heater	Thermo-couple	Reflector	O - Ring	Ceramic Ring	Titanium Ring	Titanium Tip
A1TN1									
	A1BD104011	A1TN130151	CS14120330200	TC00140195	RFT120120-040	ORING00608	KEM03002308	TIM03002308	A1TN130153
	A1BD105011	A1TN130151	CS14120430200	TC00140200	RFT120120-050	ORING00608	KEM03002308	TIM03002308	A1TN130153
	A1BD106011	A1TN130151	CS14120530225	TC00140210	RFT120120-060	ORING00608	KEM03002308	TIM03002308	A1TN130153
	A1BD108011	A1TN130151	CS14120730250	TC00140220	RFT120120-080	ORING00608	KEM03002308	TIM03002308	A1TN130153
	A1BD110011	A1TN130151	CS14120930350	TC00140220	RFT120120-100	ORING00608	KEM03002308	TIM03002308	A1TN130153
	A1BD112011	A1TN130151	CS14121130350	TC00140250	RFT120120-120	ORING00608	KEM03002308	TIM03002308	A1TN130153
A1TN2									
	A1BD204014	A1TN241201	CS14150310260	TC00140195	RFT224200-040	ORING00620	KEM04002708	TIM03602708	A1TN241203
	A1BD206014	A1TN241201	CS14150510300	TC00140200	RFT224200-060	ORING00620	KEM04002708	TIM03602708	A1TN241203
	A1BD208014	A1TN241201	CS14150710350	TC00140210	RFT224200-080	ORING00620	KEM04002708	TIM03602708	A1TN241203
	A1BD210014	A1TN241201	CS14150910450	TC00140220	RFT224200-100	ORING00620	KEM04002708	TIM03602708	A1TN241203
	A1BD212014	A1TN241201	CS14151110450	TC00140230	RFT224200-120	ORING00620	KEM04002708	TIM03602708	A1TN241203
	A1BD214014	A1TN241201	CS14151310500	TC00140250	RFT224200-140	ORING00620	KEM04002708	TIM03602708	A1TN241203
	A1BD216014	A1TN241201	CS14151510550	TC00140250	RFT224200-160	ORING00620	KEM04002708	TIM03602708	A1TN241203
A1TN3									
	A1BD306019	A1TN349301	CS01210490400	TC00140200	RFT334200-060	ORING00630	KEM06003908	TIM05003908	A1TN349303
	A1BD308019	A1TN349301	CS01210690450	TC00140210	RFT334200-080	ORING00630	KEM06003908	TIM05003908	A1TN349303
	A1BD310019	A1TN349301	CS01210890500	TC00140220	RFT334200-100	ORING00630	KEM06003908	TIM05003908	A1TN349303
	A1BD312019	A1TN349301	CS01211090600	TC00140230	RFT334200-120	ORING00630	KEM06003908	TIM05003908	A1TN349303
	A1BD314019	A1TN349301	CS01211290650	TC00140250	RFT334200-140	ORING00630	KEM06003908	TIM05003908	A1TN349303
	A1BD316019	A1TN349301	CS01211490700	TC00140250	RFT334200-160	ORING00630	KEM06003908	TIM05003908	A1TN349303
	A1BD318019	A1TN349301	CS01211690750	TC00140270	RFT334200-180	ORING00630	KEM06003908	TIM05003908	A1TN349303
A1TN4									
	A1BD408025	A1TN452451	CS01280680600	TC00140210	RFT438200-080	ORING00640	KEM05604408	TIM05404408	A1TN452453
	A1BD410025	A1TN452451	CS01280880700	TC00140220	RFT438200-100	ORING00640	KEM05604408	TIM05404408	A1TN452453
	A1BD412025	A1TN452451	CS01281080750	TC00140230	RFT438200-120	ORING00640	KEM05604408	TIM05404408	A1TN452453
	A1BD414025	A1TN452451	CS01281280800	TC00140250	RFT438200-140	ORING00640	KEM05604408	TIM05404408	A1TN452453
	A1BD416025	A1TN452451	CS01281480850	TC00140250	RFT438200-160	ORING00640	KEM05604408	TIM05404408	A1TN452453
	A1BD418025	A1TN452451	CS01281680900	TC00140270	RFT438200-180	ORING00640	KEM05604408	TIM05404408	A1TN452453
	A1BD420025	A1TN452451	CS01281880950	TC00140270	RFT438200-200	ORING00640	KEM05604408	TIM05404408	A1TN452453

Nozzle connection :
- 230 Volt
- Thermocouple Typ J

Heater	White (2x)	Load
	Yellow / Green	Earth
Thermocouple	Black	Positive [+]
	White	Negative [-]

Nozzle Band Heaters

A nozzle band heater is recommended for all polymers except PP, PE and PS.

Warning : connect the head heater to a separate circuit, do not run in parallel with the nozzle heater.

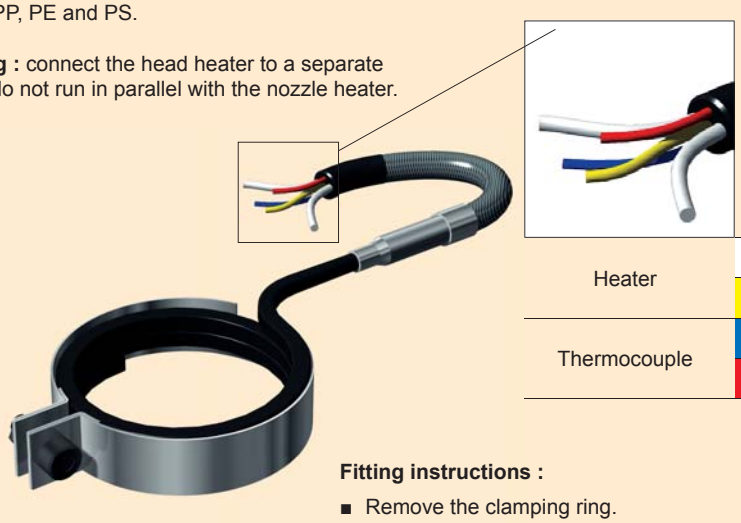

Heater	White (2x)	Live
	Yellow / Green	Earth
Thermocouple	Blue	Negative [-]
	Red	Positive [+]

Fitting instructions :

- Remove the clamping ring.
- Place the coil over the head of the bush.
- replace the clamping ring and tighten the screw.

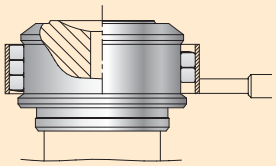

Band Heater

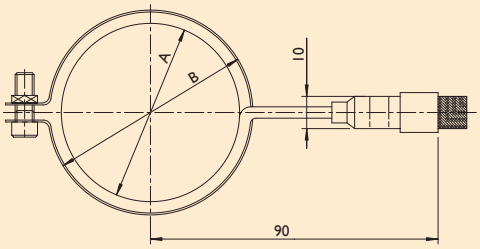

Part Code	Dimensions	A	B	Watts
BH127150	33 x 10	27	33	150
BH233200	39 x 10	33	39	200
BH347250	53 x 10	47	53	250
BH451300	57 x 10	51	57	300

Machining Details

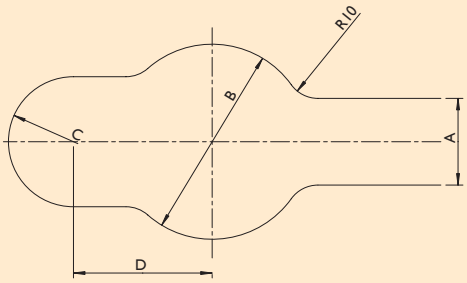

Heater Band	A	B	C	D
BH127150	20	40	R15	20
BH233200	20	45	R15	25
BH347250	20	62	R15	35
BH451300	20	65	R15	35

Manifolds

In 1983 Heatlock were the first manufacturer of hot runners to introduce ceramic insulation as standard. More than 300 different hot runner manifolds are now available as standard.

Standard manifolds :

- Manifold shape I, X, H, XX
- Thicknesses 36, 46, and 56mm
- Feed channel diameters from 6 to 16mm
- Delivery time of approx 3 weeks for all standard systems.

These already cover a wide range of applications. For all other applications we produce specially customised manifolds with a delivery time of approx 4 weeks.

Special manifolds

Please use the enquiry form on page 35 to send us a sketch of your manifold dimensions and drop centres.

You can also e-mail the enquiry to us as a pdf document or you can simply send us a CAD file to your nearest office.

Details can be found on the back page.

Manifolds

Manifold construction

This diagram shows the construction of the LKM-Heatlock manifold system.

The heaters are screwed in and can be replaced quickly and easily as required.

All contact points with the mould are insulated with ceramic.

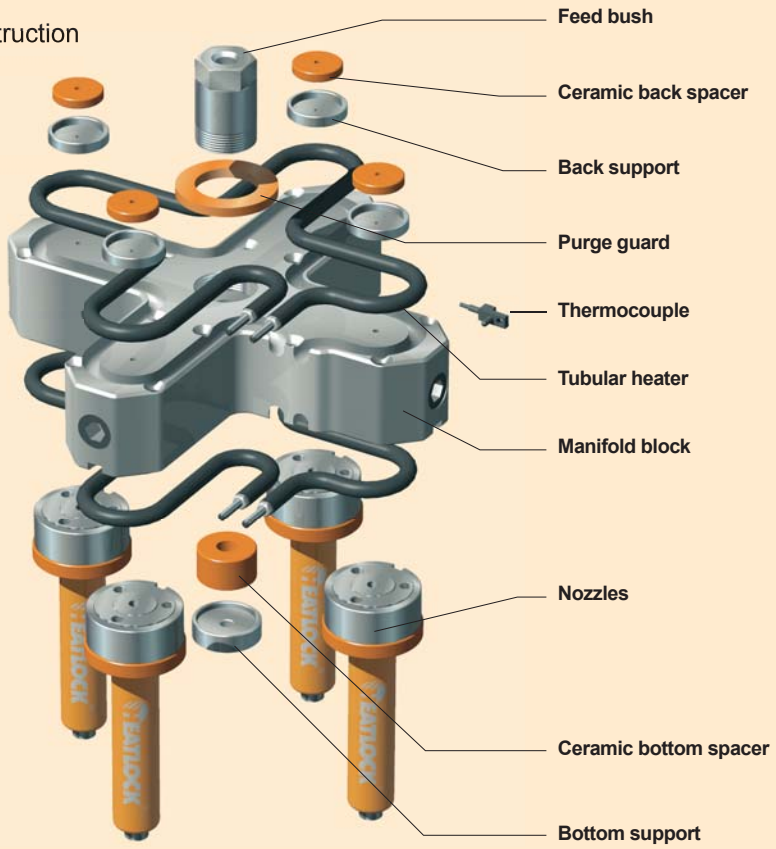

Manifold details

All LKM-Heatlock manifolds are manufactured with side plugs with spherically rounded corners as standard.

This prevents 'dead' spots and guarantees an even flow of material.

If requested, inserts can be used to plug the drops instead of side plugs.

Side plugging
(Standard)

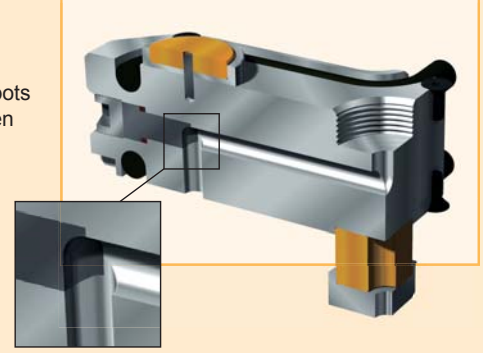

Plugging with inserts
(optional design)

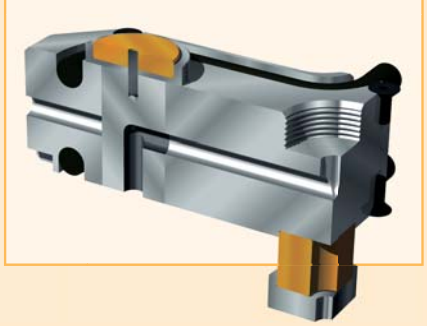

Manifolds

Standard feed bush / Nozzles without ceramic insulation

Heated feed bush / Nozzles with ceramic insulation

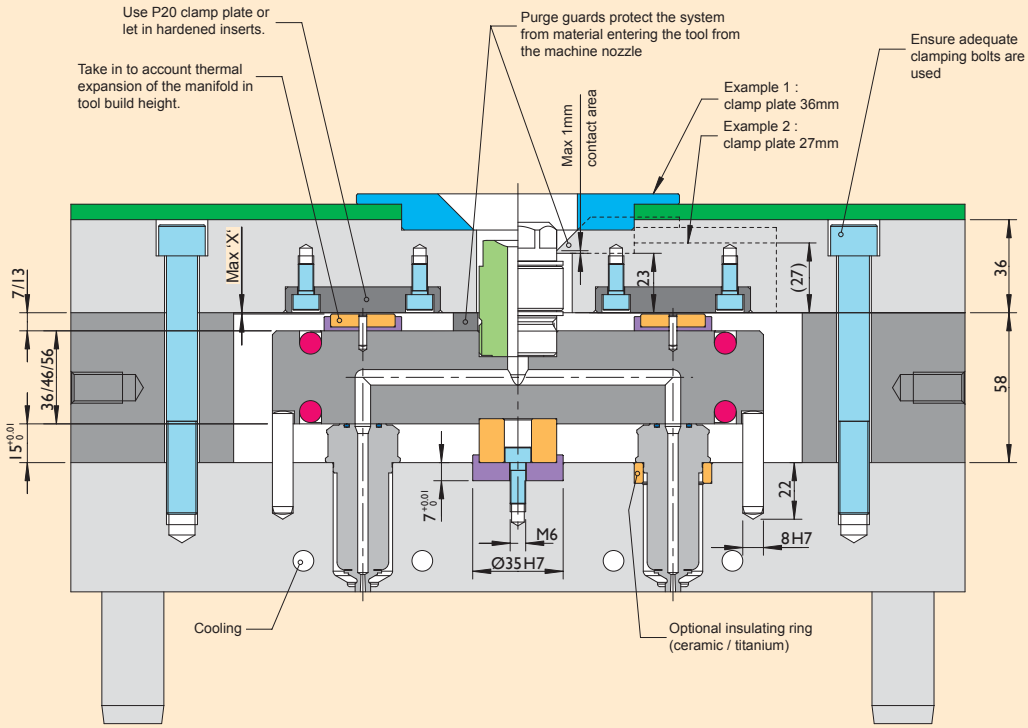

Warning :
The back supports are supplied with nominal dimensions 7mm or 13mm +0.02.

The measurement X is necessary for thermal expansion of the manifold system. It should be adjusted to suit your required build height.

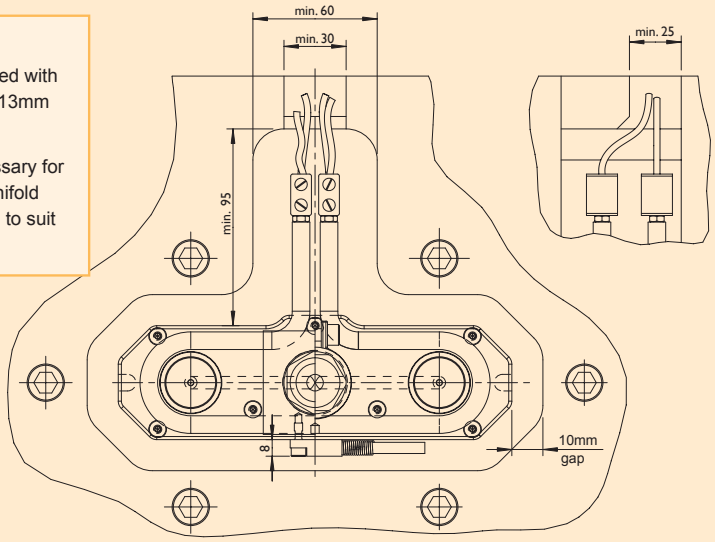

Thermal Expansion	ΔT = 120°C	ΔT = 140°C	ΔT = 180°C	ΔT = 200°C	ΔT = 220°C
Manifold 36mm thick	0.05	0.06	0.08	0.09	0.10
Manifold 46mm thick	0.07	0.08	0.10	0.11	0.12
manifold 56mm thick	0.08	0.09	0.12	0.13	0.15

Manifolds

Inline Type Manifolds

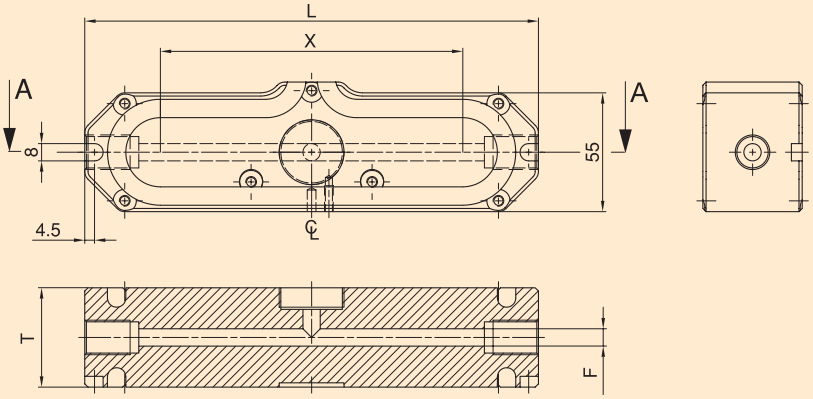

MI0-080-00-046-10 ← Order Example

	T	F (Ø)	L=130 X*	L=150 X*	L=170 X*	L=190 X*	L=210 X*	L=230 X*	L=250 X*	L=270 X*	L=290 X*	L=310 X*	L=330 X*	L=350 X*	L=370 X*
MI0/3606	36	6	60	80	100	120	140	160		200		240		280	
MI0/4608	46	8	60	80	100	120	140	160		200		240		280	
MI0/4610	46	10	60	80	100	120	140	160		200		240		280	
MI0/5612	56	12			80	100	120	140	160		200		240		280
MI0/5614	56	14			80	100	120	140	160		200		240		280
MI0/5616	56	16			80	100	120	140	160		200		240		280

* X denotes the maximum centres available of a particular standard manifold.

Manifolds

H Type Manifolds

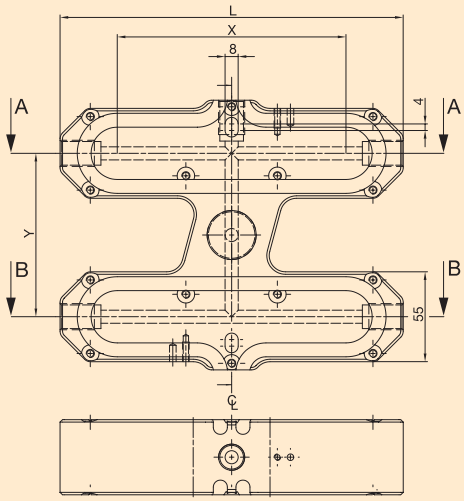

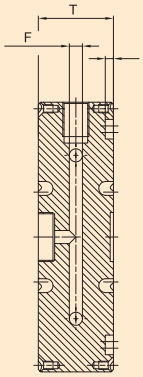

MH0-120-100-046-08

Order Example

	T	F (Ø)	Y*	L=150 X*	L=170 X*	L=190 X*	L=210 X*	L=230 X*	L=250 X*	L=270 X*	L=290 X*	L=310 X*	L=330 X*	L=350 X*	L=370 X*
MH0/3606	36	6	80	80	100	120	140	160		200		240		280	
			100		100	120	140	160		200		240		280	
			120			120	140	160		200		240		280	
			140				140	160		200		240		280	
MH0/4608	46	8	80	80	100	120	140	160		200		240		280	
			100		100	120	140	160		200		240		280	
			120			120	140	160		200		240		280	
			140				140	160		200		240		280	
MH0/4610	46	10	80	80	100	120	140	160		200		240		280	
			100		100	120	140	160		200		240		280	
			120			120	140	160		200		240		280	
			140				140	160		200		240		280	
MH0/5612	56	12	80		80	100	120	140	160		200		240		280
			100			100	120	140	160		200		240		280
			120				120	140	160		200		240		280
			140					140	160		200		240		280
MH0/5614	56	14	80		80	100	120	140	160		200		240		280
			100			100	120	140	160		200		240		280
			120				120	140	160		200		240		280
			140					140	160		200		240		280
MH0/5616	56	16	80		80	100	120	140	160		200		240		280
			100			100	120	140	160		200		240		280
			120				120	140	160		200		240		280
			140					140	160		200		240		280

* X and Y denotes the maximum centres available of a particular standard manifold.

Manifolds

X Type Manifolds

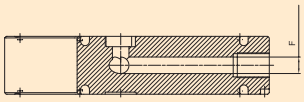

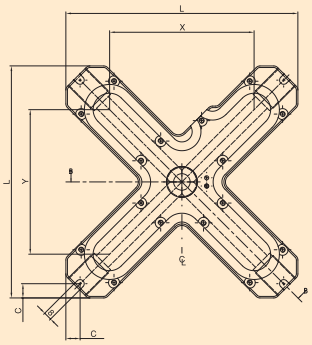

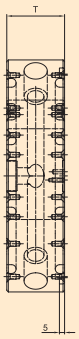

MX0-120-120-56-12 ← Order Example

	T	F (Ø)	C	L=125 X/Y*	L=145 X/Y*	L=165 X/Y*	L=185 X/Y*	L=205 X/Y*	L=225 X/Y*	L=245 X/Y*	L=265 X/Y*	L=285 X/Y*	L=305 X/Y*	L=325 X/Y*
MX0/3606	36	6	11	60	80	100	120	140	160		200		240	
MX0/4608	46	8	11	60	80	100	120	140	160		200		240	
MX0/4610	46	10	11	60	80	100	120	140	160		200		240	
MX0/5612	56	12	13,8					120	140	160		200		240
MX0/5614	56	14	13,8					120	140	160		200		240
MX0/5616	56	16	13,8					120	140	160		200		240

* X and Y denotes the maximum centres available of a particular standard manifold.

XX Type Manifolds

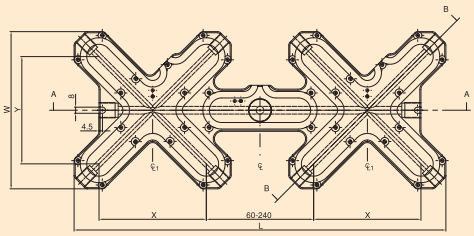

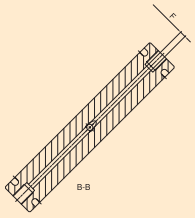

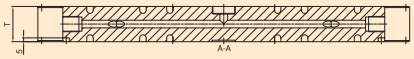

MXX-100-100-56-12 ← Order Example

	T	F (Ø)	L=260 X/Y*	L=290 X/Y*	L=306 X/Y*	L=330 X/Y*	L=365 X/Y*	L=370 X/Y*	L=425 X/Y*	L=445 X/Y*	L=485 X/Y*	L=505 X/Y*	L=545 X/Y*	L=565 X/Y*	L=665 X/Y*	L=685 X/Y*	L=785 X/Y*
MXX/3606	36	6	60		80		100		120		140		160		200		240
MXX/4608	46	8	60		80		100		120		140		160		200		240
MXX/4610	46	10		60		80		100	120		140		160		200		240
MXX/5612	56	12								120		140		160		200		240
MXX/5614	56	14								120		140		160		200		240
MXX/5616	56	16								120		140		160		200		240

* X and Y denotes the maximum centres available of a particular standard manifold.

Optional Accesories

Standard Feed Bush

DSP4503006

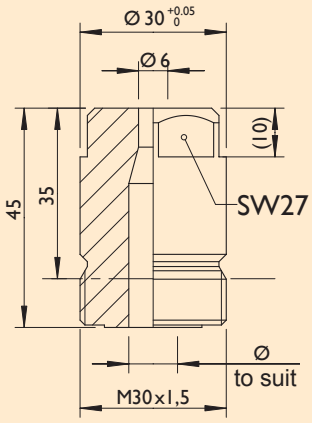

Heated Feed Bush

DSP5203006

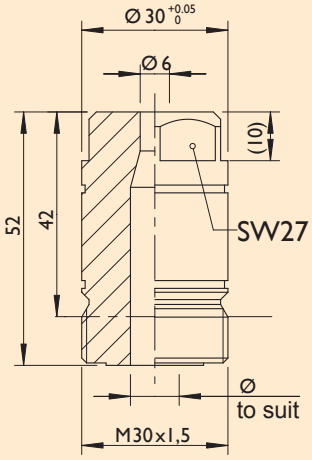

Heated feed bush assembly

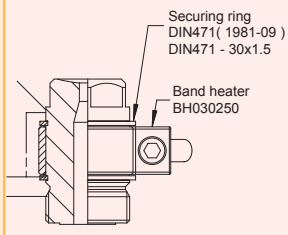

Please note :

- A heated feed bush is recommended for all polymers except PE, PP and PS.
- **Warning :** Connect the band heater to a separate control circuit.
  Do not connect the band heater and nozzle heater in parallel.

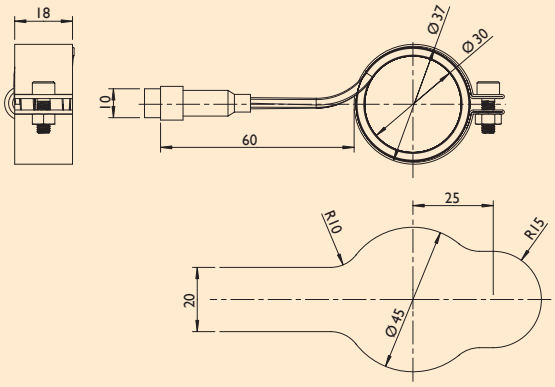

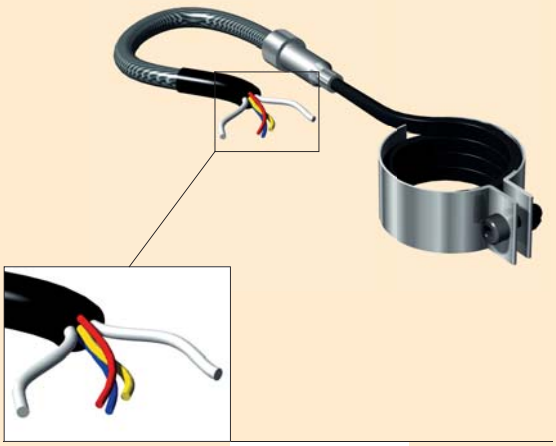

Feed Bush	Band Heater	Watts
DSP5203006	BH030250	250

Radius depth recommendations

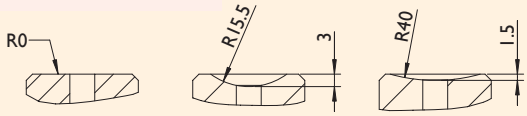

Heater	White (2x)	Load
	Yellow / Green	Earth
Thermocouple	Blue	Negative [-]
	Red	Positive [+]

Optional Accesories

Ceramic Ring

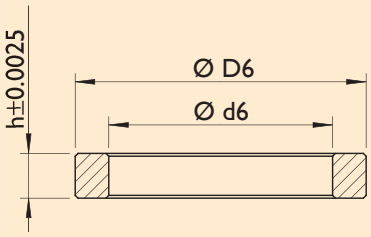

Part Code	ØD6	Ød6	h±0.0025	To suit part
KEM03002308	Ø30f8	Ø23H8	8	A1 EN1, TP1, TN1
KEM04002708	Ø40f8	Ø27H8	8	A1 EN2, TP2, TN2
KEM06003908	Ø62f8	Ø39H8	8	A1 EN3, TP3, TN3
KEM05604408	Ø56f8	Ø44H8	8	A1 EN4, TP4, TN4
KEM03001017	Ø30g6	Ø10,5±0,3	17	DSP0353010

Back support KEA0300307

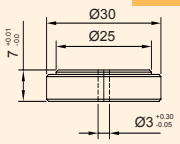

Ceramic and support cup complete assembly

Back support KEA0300313

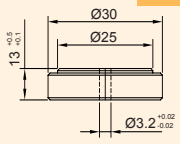

Ceramic and support cup complete assembly

Bottom support cup

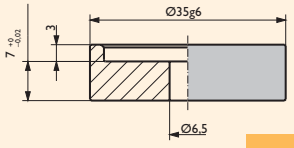

DSP0353010

Titanium ring

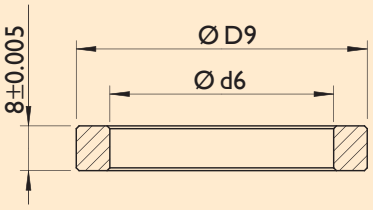

Part Code	ØD9	Ød6	To suit part
TIM03002308	Ø30f8	Ø23H7	A1 EN1, TP1, TN1
TIM03602708	Ø36f8	Ø27H7	A1 EN2, TP2, TN2
TIM05003908	Ø50f8	Ø39H7	A1 EN3, TP3, TN3
TIM05404408	Ø54f8	Ø44H7	A1 EN4, TP4, TN4

Hot halves

Inexpensive and ready to use with an immediate advantage in time and costs.

You provide DMS with your specific requirements and we will draw the hot top GA to suit your requirements and supply a fully built hot half.

This will be manufactured and wired as per your specifications and is supplied finish built ready to bolt on to your tool.

The cooling systems and heaters will be checked, tested and signed off by DMS prior to despatch.

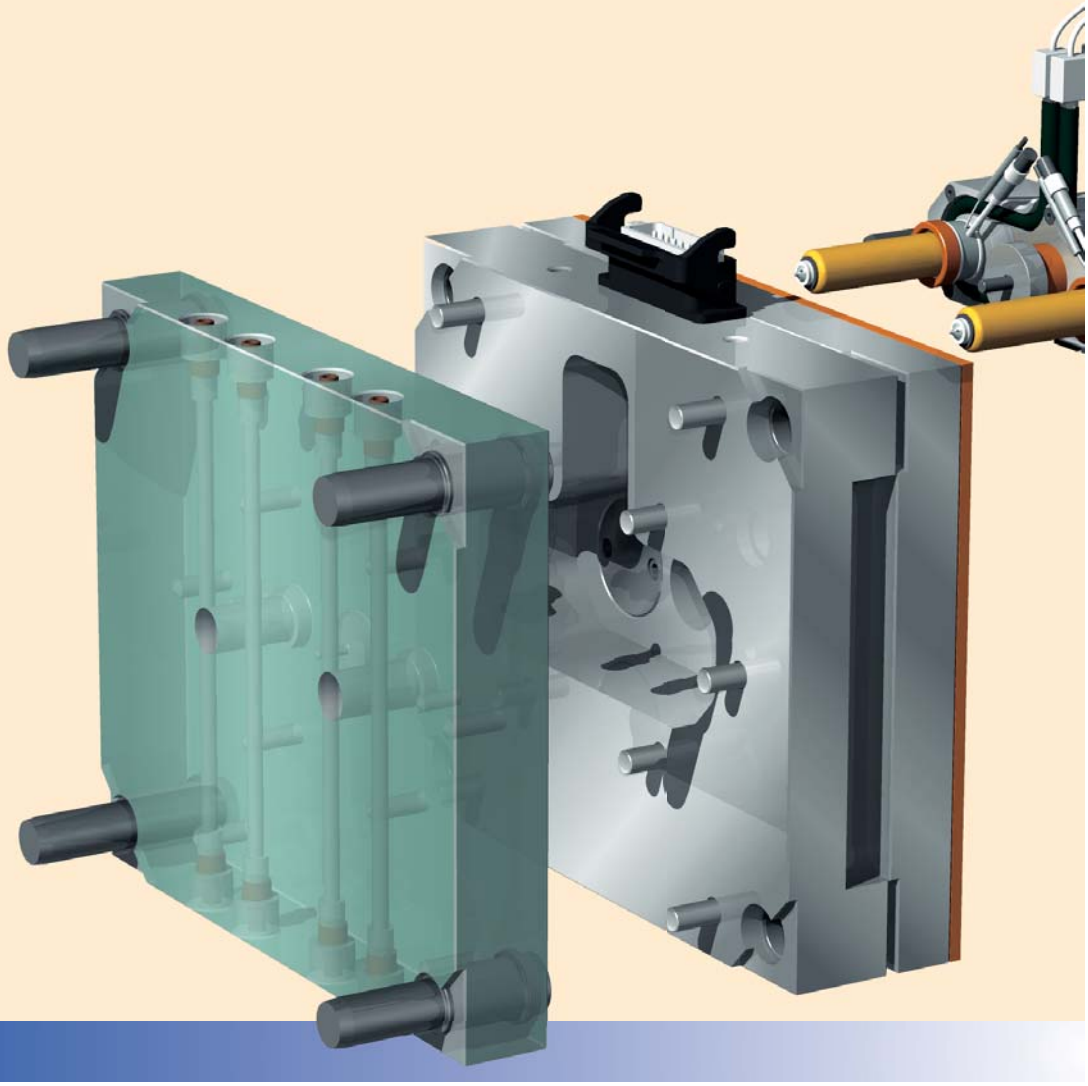

Hot halves

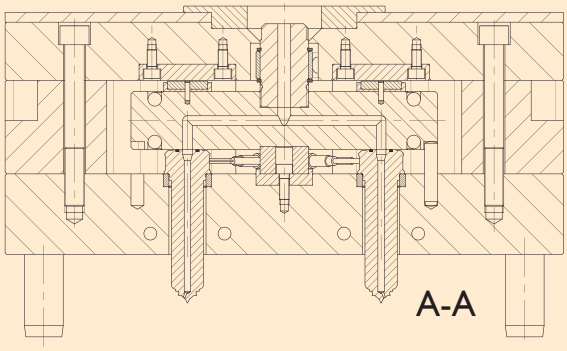

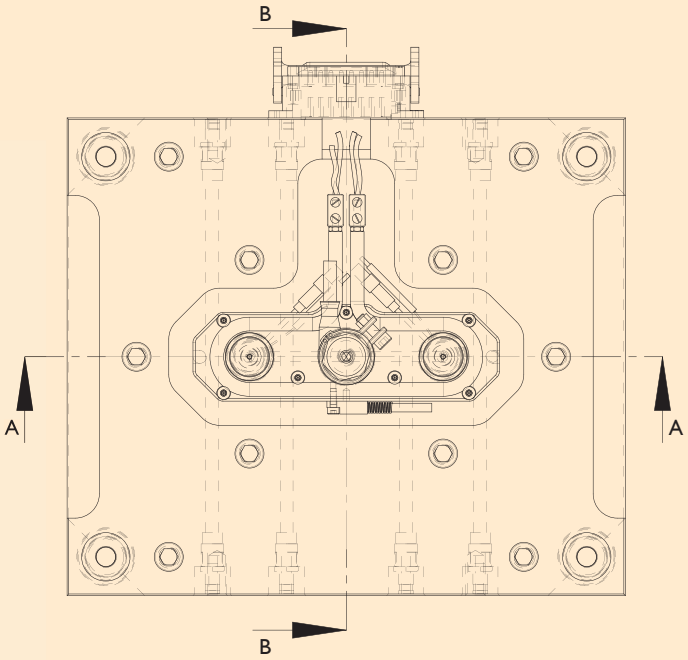

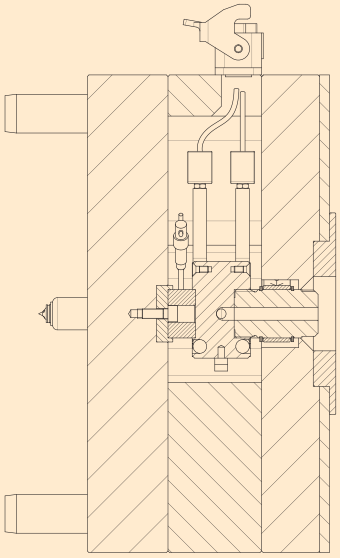

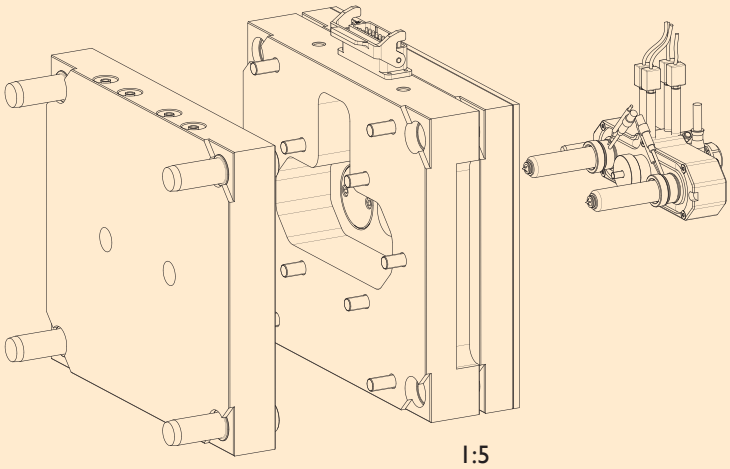

Special manifolds and nozzles

Tailor made hot runner systems

For many applications you can find your solution with standardised manifolds. Should this not be possible, we can produce a hot runner system tailor-made to your specific requirements.

The example below shows a hot runner system for the company Voestalpine Polynorm Grau in Schwäbisch Gmünd.

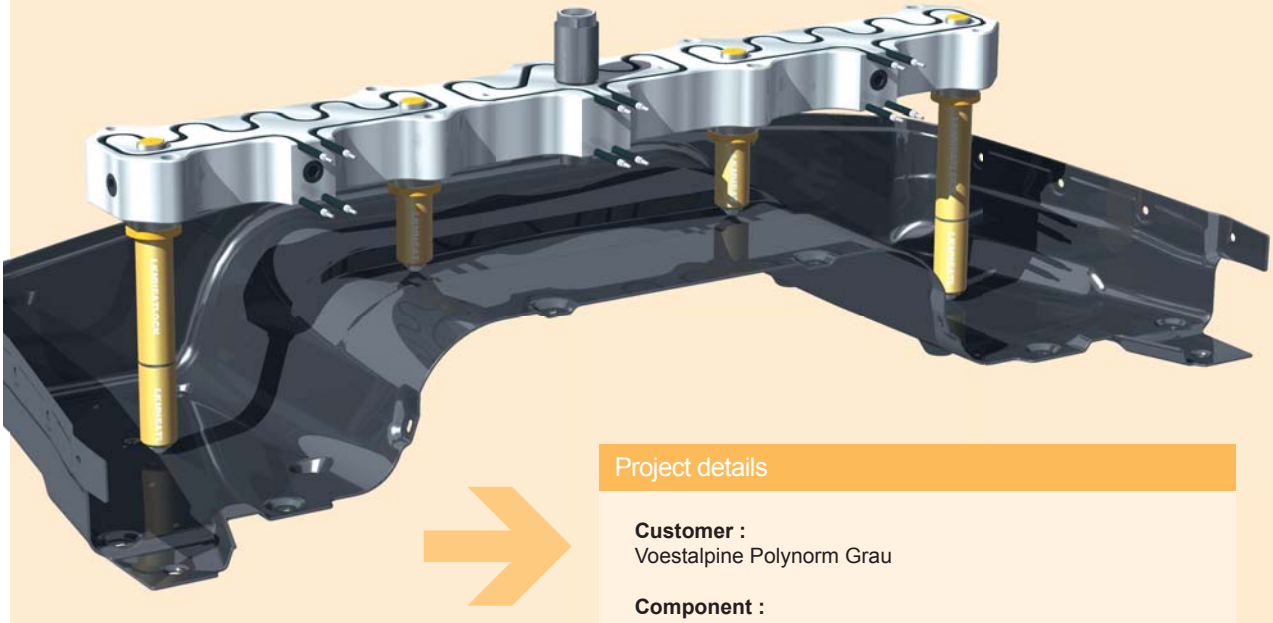

Project details

Customer :
Voestalpine Polynorm Grau

Component :
Trough for Lamborghini Gallardo Spyder
Part weight approx 3,800g
Material : PC

Hot runner system :
Manifold : 4 drop fully balanced
Dimensions : 1100mm x 100mm x 66mm
Feed channel : 20mm
Nozzles : A1TP4-250 (special with two heat zones)
A1 TP4-100 (standard)
utilising the optional ceramic rings

Hot Runner Enquiry Form

See back page for contact details.

Company name

Contact

Address

Postcode

Telephone Fax

E-Mail

Component details

Project | Component name

Component weight g | Shot weight g | No. of cavities

Gate position (direct / sub runner) | Material

Fillers | Material trade name and grade

Sketch / notes

Date

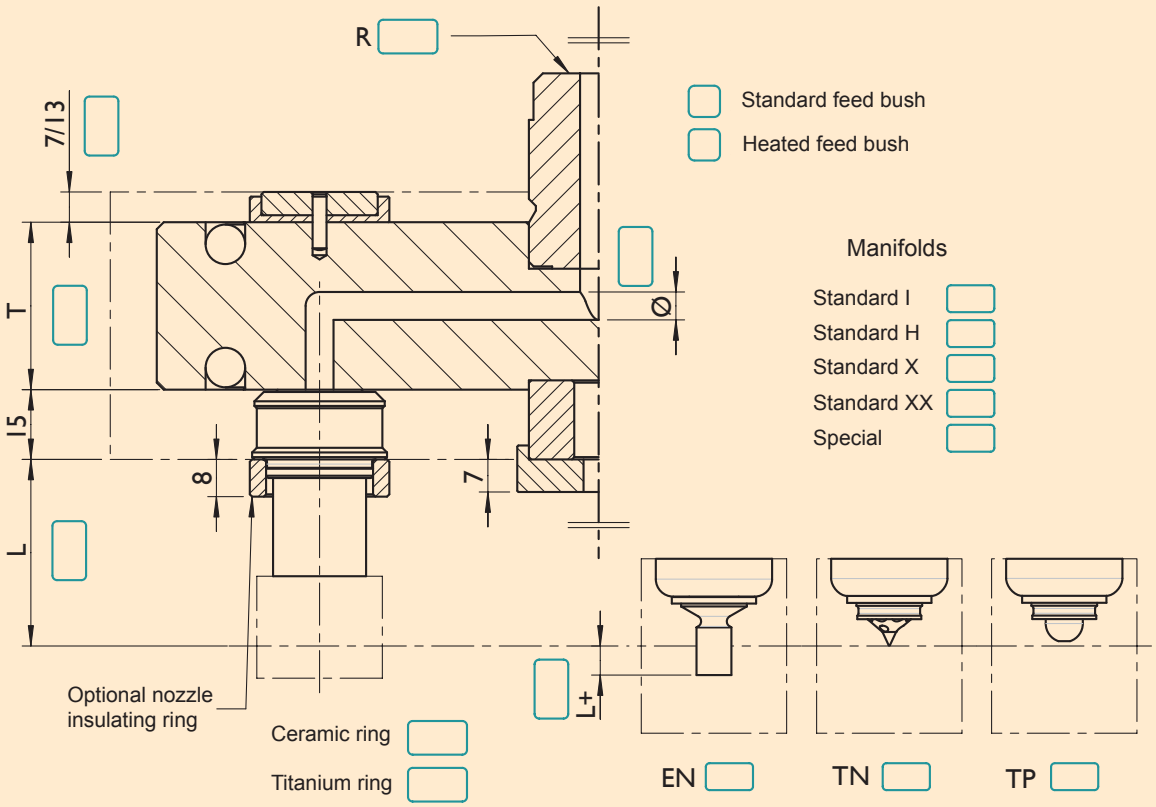

Standard feed bush

Heated feed bush

Manifolds

Standard I

Standard H

Standard X

Standard XX

Special

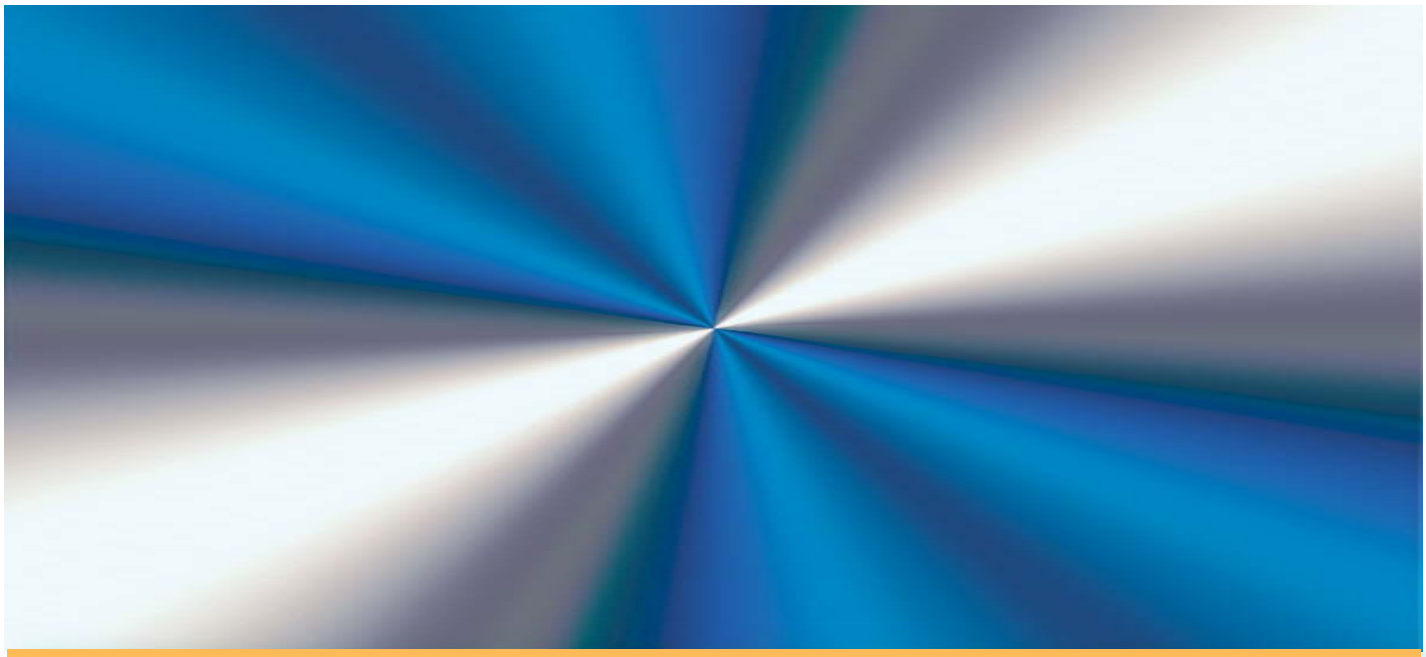

United Kingdom

Unit 11, Blenheim Road
Cressex Business Park
High Wycombe
Buckinghamshire
England
HP12 3RS
Tel: + 44 (0) 1494 523811
Fax: + 44 (0) 1494 452898
Web: www.dms-diemould.co.uk
e-mail: sales@dms-diemould.co.uk

Canada

1875 Blackacre Drive
Oldcastle
Ontario
Canada
N0R 1L0

Tel: + 1 519 737-6743 / + 1 800-265-4885
Fax: + 1 519 737-6744 / + 1 800-845-3807
Web: www.dmscomponents.com
e-mail: sales@dmscomponents.com

USA

15 Duffy Drive
Taunton
Massachusetts
USA
02780-4056
Tel: +1 800 265-5885
Fax: +1 800 845-3807
Web: www.dmscomponents.com
e-mail: sales@dmscomponents.com

1026 National Parkway
Schaumburg
Illinois
USA
60173-4519
Tel: + 1 847 885-6007
Fax.: + 1 847 886-6075
Web: www.dmscomponents.com
e-mail: sales@dmscomponents.com

17197 Newhope Street
Unit I, Fountain Valley
California
USA
92708-4228
Tel: +1 714 751-1615 / 800-421-3993
Fax: +1 714 751-3861 / 800-953-9561
Web: www.dmscomponents.com
e-mail: sales@dmscomponents.com

©2007