A MEGA HEATLOCK®

Assembly Instructions

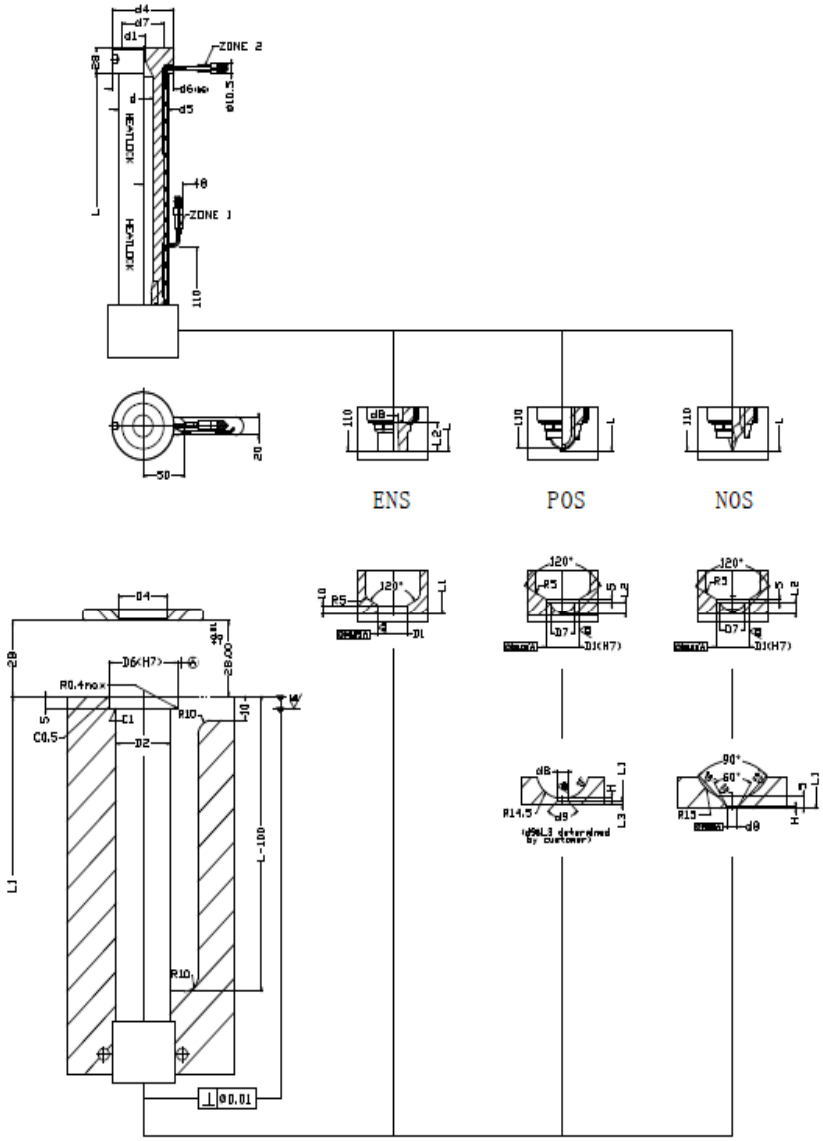

Features:

The maximum permitted contact force from Machine nozzle is 4 -Mpa. The AMEGA series can be designed for a single nozzle application.

The coil heater is designed to provide uniform heat distribution along the length of the nozzle.A concentration of heater windings at both ends of the nozzle compensate for heat losses that occur between the nozzle and mould steel.

Assembly method:

Nozzle bore machining should follow the instruction in drawing . Pay attention to length L1.L1 is calculated by adding the nozzle length to the nozzle theoretical heat expansion. Nozzle heat expansion values may be found in table 1.

when using the A MEGA in a single drop application, make sure that the back of the nozzle does not touch the locating ring. Contact with the locating ring will alllow heat from the nozzle to dissipate into the mold.

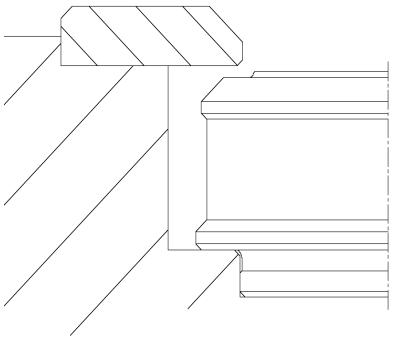

A2 MEGA Series

(Unit:mm)

Series	L	d	d1	d4	d5	d6	d7	d8			L2			H		D1			D2	D4	D6	D7	
	All	All	All	All	All	All	All	ENS	POS	NOS	ENS	POS	NOS	POS	NOS	ENS	POS	NOS	All	All	All	POS	NOS
Size 24	200<L<500	24	5~10	74	60	74.00	50	12	≥6	≥4	30	12		1.5	1	35	40	40	64	60	74.00	29	

* d diameter according to the cylinder ID.

Length of nozzle

Heat expansion of the nozzle must be considered in order to ensure minimum vestige on the part. Expansion values (X.xx)various temperatures and nozzle lengths are illustrated in the table below:

Nozzle heat expansion(L1=L+X.XX)

Length / Temperature	250	300	350	400	450	500
200	0.65	0.77	0.89	1.01	1.13	1.25
250	0.85	1	1.16	1.31	1.47	1.62
300	1.08	1.27	1.47	1.67	1.86	2.06
350	1.18	1.39	1.6	1.82	2.03	2.25

Table 1

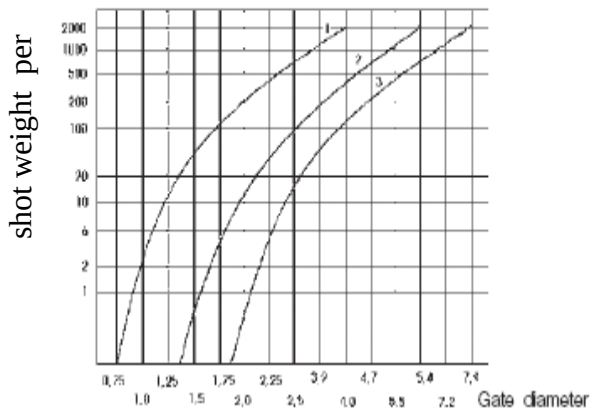

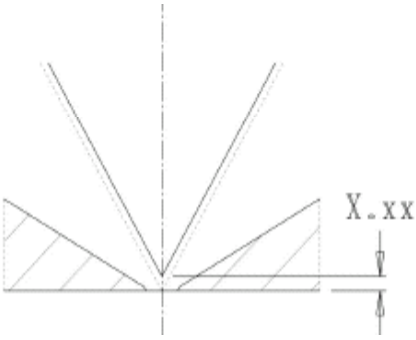

1.Low viscosity: PS,PE,PP
2.Medium viscosity:ABS SAN PA POM

Note: for filled materials, gate diameter should increase 20% .

The diagram above is a guideline for gate diameters needed for various plastics and shot weights.

Note: If the gate diameter is too small, an unnecessary high bushing temperature will have to be set for the gate not to freeze between shots. The suggested figures are approximate .Gate dimensions may be influenced by the shape of the part and the design of the mould,etc.

The balance between shot weight, injection speed, mould temperature , temperature opposite the gate, cooling around the gate,and injection pressure are all factors that affect gate size . A small gate freezes quicker than a large one. When injection moulding with very short cycle times and short injection times, it may be necessary to design gate cooling so that the gate area does not overheat.

If the sprue bushing is feeding a runner which has a gate into a cavity , it may be suitable to make the bushing gate larger than actual necessary in order to reduce pressure drop and shear.

If an electric sprue bushing is used, this will reduce the length of flow in cold steel therefore allowing the reduction of the cross section of the cold runner. This is important in order to get the shortest possibility of cycle time. Start with a smaller gate than indicated in the table.

Wiring instruction

Attention: Only connectors designed to match the temperature controller are to be used. Heater and T/C wiring must not be connected in parallel.

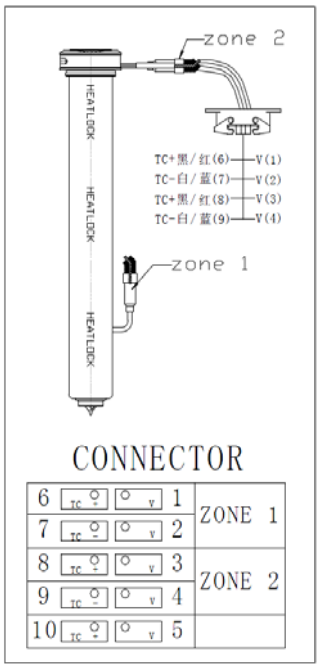

10 pin connector:HEATLOCK connections as right:

1.Zone 1 Connect (1)(2)with heater
2. Connect T/C wire (black/red)with (6)
3. Connect T/C wire (white/blue)with (7)
4. ZONE2 Connect (3)(4)with heater
5.Connect T/C wire (black/red)with (8)
6. Connect T/C wire (black/red)with (9)
7. Connect mould with ground wire&insert

Instructions for replacement of heater or T/C
Attention: For best performance use HEATLOCK original components.

Disassembly:

1. Open lock ring.
2. Remove reflector.
3. Carefully slide heater off of nozzle.
4. Remove T/C.

Assembly:opposite processing to disassembly

If necessary , replace T/C by inserting new T/C into small hole at the end of slot .Ensure that the tip is in full contact with the bottom of the bore before bending the T/C along the slot.Install heater onto nozzle ensuring that the T/C is not displaced.Bundle the heater and T/C together using high temperature adhesive tape.

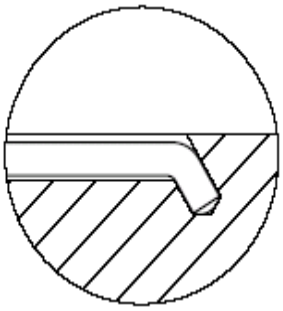

Nozzle assembly torque	
Size No.	Torque(N)
size 24	80

(Table 二)

*If there are any problems encountered during assembly, please call （86）757- 2639 1992.